Pressurized Payload Accommodation Handbook

International Space Station Program

Revision A

June 6, 2002

TYPE 3 DOCUMENT – For Information, Surveillance, Review or Management Control

National Aeronautics and Space Administration
International Space Station Program
Johnson Space Center
Houston, Texas
Contract No. NAS15–10000 (PA11)

REVISION AND HISTORY PAGE

REV.	DESCRIPTION	PUB. DATE
–	INITIAL DRAFT RELEASE PER DR PA11	12–01–98
–	INITIAL RELEASE APPROVED PER DR PA11	03–29–99
A	REVISION A, PER DR PA11	06–28–02

ERU: /s/ M. Hehn 06–28–02

INTERNATIONAL SPACE STATION

PRESSURIZED PAYLOAD ACCOMMODATION HANDBOOK

JUNE 6, 2002

PREFACE

This volume of the Payload Accommodations Handbook (PAH) constitutes an integral part of the overall International Space Station (ISS) PAH addressing the various laboratory modules and other parts of the ISS infrastructure where payloads may be located.

The purpose of this volume is to provide sufficient information on the interfaces, accommodations, capabilities, performance characteristics, and constraints specific to payloads located in the pressurized volume of ISS. This will enable Users to understand how payload equipment will be accommodated in the ISS.

This volume covers transportation and on-orbit phases of the pressurized payloads.

INTERNATIONAL SPACE STATION
PRESSURIZED PAYLOAD ACCOMMODATION HANDBOOK

JUNE 6, 2002

CONCURRENCE

PREPARED BY:	Bruce D. Wright	Boeing PE&I
	PRINT NAME	ORGN
	/s/ Bruce D. Wright	26 June 2002
	SIGNATURE	DATE
CHECKED BY:	Bruce D. Wright	Boeing PE&I
	PRINT NAME	ORGN
	/s/ Bruce D. Wright	26 June 2002
	SIGNATURE	DATE
SUPERVISED BY (BOEING):	Mo Saiidi	Boeing PEI
	PRINT NAME	ORGN
	/s/ Mo Saiidi	26 June 2002
	SIGNATURE	DATE
DQA:	Dave Henderson	Boeing
	PRINT NAME	ORGN
	/s/ Dave Henderson	26 June 2002
	SIGNATURE	DATE

INTERNATIONAL SPACE STATION PROGRAM
PRESSURIZED PAYLOAD ACCOMMODATION HANDBOOK

LIST OF CHANGES

JUNE 6, 2002

All changes to paragraphs, tables, and figures in this document are shown below:

SSCBD	ENTRY DATE	CHANGE	PARAGRAPH(S)
			TABLE(S)
			FIGURE(S)

TABLE OF CONTENTS

PARAGRAPH		PAGE
1.0	INTRODUCTION	1–1
1.1	PURPOSE	1–1
1.2	SCOPE	1–1
1.3	PRECEDENCE	1–1
1.4	DELEGATION OF AUTHORITY	1–1
2.0	DOCUMENTS	2–1
2.1	APPLICABLE DOCUMENTS	2–1
2.1.1	GOVERNMENT DOCUMENTS	2–1
2.1.2	NON-GOVERNMENT DOCUMENTS	2–4
3.0	OVERVIEW	3–1
3.1	INTERNATIONAL SPACE STATION (ISS) PAYLOAD ACCOMMODATIONS	3–1
3.2	PAYLOAD TRANSPORTATION	3–10
3.2.1	MINI–PRESSURIZED LOGISTICS MODULE	3–10
3.2.1.1	AISLE STOWAGE CONTAINER	3–10
3.2.1.2	RE–SUPPLY STOWAGE PLATFORM	3–13
3.2.1.3	ACTIVE CARGO SUPPORT RESOURCES	3–14
3.2.2	SHUTTLE MIDDECK ACCOMMODATIONS	3–14
3.2.3	OTHER VEHICLES	3–15
4.0	SYSTEM DESCRIPTIONS, INTERFACES, AND PAYLOAD ACCOMMODATIONS	4–1
4.1	STRUCTURAL/MECHANICAL, AND MICROGRAVITY AND STOWAGE INTERFACE REQUIREMENTS	4–1
4.1.1	STRUCTURAL/MECHANICAL	4–1
4.1.1.1	GSE INTERFACES	4–7
4.1.1.2	MPLM INTERFACES	4–7
4.1.1.2.1	MPLM LATE/EARLY ACCESS REQUIREMENTS	4–8
4.1.1.3	LOADS REQUIREMENTS	4–9
4.1.1.4	RACK REQUIREMENTS	4–10
4.1.1.4.1	LAB WINDOW RACK LOCATION REQUIREMENTS	4–11
4.2	MICROGRAVITY	4–11
4.2.1	MICROGRAVITY ENVIRONMENT FOR PAYLOADS	4–11
4.2.1.1	QUASI–STEADY ACCELERATION ENVIRONMENT	4–13
4.2.1.2	VIBRATORY ACCELERATION ENVIRONMENT	4–15
4.2.1.3	TRANSIENT ACCELERATION ENVIRONMENT	4–16
4.2.1.4	ARIS VIBRATION AND TRANSIENT ENVIRONMENT CAPABILITY	4–16
4.2.1.5	NON ARIS VIBRATION AND TRANSIENT ENVIRONMENT	4–17
4.2.1.6	ISS MICROGRAVITY ENVIRONMENT MEASUREMENTS	4–18
4.2.2	MICROGRAVITY REQUIREMENTS FOR PAYLOADS	4–19
4.2.2.1	QUASI–STEADY	4–19
4.2.2.2	VIBRATORY REQUIREMENTS	4–19
4.2.2.2.1	PRESSURIZED PAYLOADS VIBRATORY REQUIREMENTS	4–19
4.2.2.2.2	ATTACHED PAYLOADS VIBRATORY REQUIREMENTS	4–20

4.2.2.3 TRANSIENT REQUIREMENTS 4–20
4.2.2.4 ARIS MICROGRAVITY 4–20
4.2.2.4.1 ARIS RACK VIBRATORY REQUIREMENT 4–20
4.2.2.4.2 ARIS TRANSIENT REQUIREMENT 4–20
4.2.3 GUIDELINES FOR PAYLOAD DEVELOPMENT 4–21
4.2.3.1 QUASI–STEADY AND TRANSIENT REQUIREMENTS 4–21
4.2.3.2 VIBRATORY REQUIREMENT VERIFICATION (ALL PAYLOADS) 4–22
4.2.3.2.1 ISPR VERIFICATION 4–22
4.2.3.2.2 ATTACHED PAYLOAD VERIFICATION 4–22
4.2.3.2.3 SOURCE VIBRATION MEASUREMENT 4–23
4.2.3.3 TRANSIENT REQUIREMENT VERIFICATION 4–23
4.3 ELECTRICAL POWER SYSTEM 4–24
4.3.1 PRIMARY POWER SYSTEM 4–25
4.3.2 SECONDARY POWER SYSTEM 4–26
4.3.3 EPS ACCOMMODATIONS 4–29
4.3.3.1 FLIGHTS UF–1 THROUGH 12A 4–30
4.3.3.2 ASSEMBLY COMPLETE 4–31
4.3.4 ELECTRICAL DESIGN GUIDELINES 4–33
4.3.4.1 PAYLOAD NOISE AND TRANSIENT SUSCEPTIBILITY GUIDELINES . 4–33
4.3.4.2 WIRE GAUGE SIZE CHANGES 4–34
4.3.4.3 MAIN AND AUXILIARY POWER ISOLATION 4–35
4.3.4.4 ISPR ELECTRICAL ACCOMMODATIONS 4–35
4.3.4.5 PORTABLE EQUIPMENT ACCOMMODATIONS 4–35
4.3.4.5.1 PORTABLE EQUIPMENT/POWER CORDS 4–35
4.3.4.5.2 PORTABLE EQUIPMENT CIRCUIT PROTECTION 4–36
4.3.4.6 ELECTROMAGNETIC COMPATIBILITY GUIDELINES (EMC) 4–36
4.3.4.6.1 ELECTRICAL GROUNDING 4–36
4.3.4.6.1.1 PRIMARY ELECTRICAL POWER 4–36
4.3.4.6.1.1.1 SECONDARY AND TERTIARY ELECTRICAL POWER 4–37
4.3.4.6.1.1.2 CONTROL POWER BUS RETURN 4–37
4.3.4.6.1.1.3 ISOLATED ELECTRICAL POWER WITHIN EQUIPMENT 4–37
4.3.4.6.1.1.4 ISOLATED ELECTRICAL POWER BETWEEN EQUIPMENT 4–37
4.3.4.6.1.1.5 LOAD CONVERSION 4–37
4.3.4.6.1.1.6 SIGNAL CIRCUIT RETURN GROUNDING 4–37
4.3.4.6.1.1.7 COMMON MODE NOISE AND INPUT ISOLATION 4–38
4.3.4.6.2 ELECTRICAL BONDING 4–38
4.3.4.6.3 ELECTROMAGNETIC INTERFERENCE (EMI) 4–39
4.3.4.6.4 ELECTROSTATIC DISCHARGE 4–39
4.3.4.6.5 ALTERNATING CURRENT MAGNETIC FIELDS 4–39
4.3.4.6.6 DIRECT CURRENT MAGNETIC FIELDS 4–39
4.3.4.6.7 CABLE AND WIRE DESIGN 4–40
4.3.4.7 SAFETY-SUBSYSTEM CIRCUITS REDUNDANCY 4–40
4.3.4.8 POWER DISTRIBUTION PROTECTION CIRCUITRY 4–40
4.3.4.9 PLUGS AND RECEPTACLES 4–40
4.3.4.10 PORTABLE EQUIPMENT/POWER CORDS 4–41
4.3.4.11 OVERLOAD PROTECTION 4–41
4.3.4.12 SWITCHES/CONTROLS 4–42

4.3.4.13 GROUNDING FAULT CIRCUIT INTERRUPTERS 4–42
4.3.4.14 POWER MAINTENANCE SWITCH 4–42
4.3.4.15 LOSS OF POWER 4–42
4.3.4.16 EMI SUSCEPTIBILITY FOR SAFETY-SUBSYSTEM CIRCUITS 4–43
4.4 COMMAND AND DATA HANDLING (C&DH) 4–43
4.4.1 C&DH PAYLOAD SUPPORT ARCHITECTURE 4–45
4.4.1.1 PAYLOAD MDM 4–45
4.4.1.1.1 PAYLOAD EXECUTIVE PROCESSOR (PEP) 4–46
4.4.1.1.2 TIMELINER 4–53
4.4.1.2 PORTABLE COMPUTER SYSTEM (PCS) 4–53
4.4.1.2.1 DISPLAYS 4–54
4.4.1.2.2 SSC OPERATIONAL GUIDELINES/GROUNDRULES 4–54
4.4.1.2.3 PAYLOAD APPLICATION SOFTWARE (PAS) 4–54
4.4.1.2.4 PORTABLE COMPUTER SYSTEM COMMAND AND DATA SOFTWARE (PCSCDS) OVERVIEW 4–55
4.4.1.3 PAYLOAD ETHERNET HUB/GATEWAY (PEHG) 4–57
4.4.1.4 AUTOMATED PAYLOAD SWITCH 4–58
4.4.1.5 PAYLOAD DATA INTERFACES 4–58
4.4.1.5.1 CCSDS PROTOCOL DESCRIPTION 4–58
4.4.1.5.1.1 CCSDS APPLICATION PROCESS IDENTIFIER (APID) MANAGEMENT 4–59
4.4.1.5.1.2 DATA TYPES 4–59
4.4.1.5.1.3 WORD ALIGNMENT 4–60
4.4.1.5.1.3.1 WORD AND BYTE ORDERING 4–60
4.4.1.5.1.4 PROGRAM UNIQUE IDENTIFIERS 4–60
4.4.1.5.2 PAYLOAD 1553B LOCAL BUS 4–60
4.4.1.5.2.1 COMMUNICATION FORMAT ON THE PAYLOAD 1553B BUS 4–61
4.4.1.5.2.2 ELECTRICAL CHARACTERISTICS 4–61
4.4.1.5.3 MEDIUM RATE DATA LINK 4–61
4.4.1.5.3.1 ELECTRICAL CHARACTERISTICS 4–62
4.4.1.5.4 HIGH RATE DATA LINK 4–62
4.4.1.5.4.1 ELECTRICAL CHARACTERISTICS 4–62
4.4.1.5.5 JEM C&DH PAYLOAD SUPPORT ARCHITECTURE FOR PRESSURIZED PAYLOADS 4–62
4.4.1.5.6 APM DATA MANAGEMENT SYSTEM PAYLOAD SUPPORT ARCHITECTURE FOR PRESSURIZED PAYLOADS 4–62
4.4.1.5.7 CAM C&DH PAYLOAD SUPPORT ARCHITECTURE FOR PRESSURIZED PAYLOADS 4–62
4.4.1.5.8 MPLM INTERFACE 4–63
4.4.1.6 NCS-TO-OIU TELEMETRY 4–63
4.4.1.7 COMMAND UPLINKS 4–64
4.4.1.7.1 STANDARD COMMAND FORMAT 4–66
4.4.1.7.2 TIME AUTHENTICATION 4–66
4.4.1.7.3 TIME-TAGGED COMMANDS 4–67
4.4.1.7.3.1 TIME-TAGGED COMMANDS - REQUIREMENTS 4–68
4.4.1.7.4 COMMAND LOGS 4–68
4.4.1.7.4.1 COMMAND LOGS - REQUIREMENTS 4–69
4.4.1.7.5 COMMAND RESPONSE 4–69
4.4.1.7.5.1 COMMAND RESPONSE - REQUIREMENTS 4–70

4.4.1.7.6 COMMANDS TO FGB, NCS AND CCS VIA OIU 4–71
4.4.1.7.6.1 GENERAL REQUIREMENTS 4–72
4.4.1.7.6.2 COMMAND FORMAT VIA OIU 4–72
4.4.1.7.6.3 COMMAND MULTIPLEXING FROM ALTERNATE GROUND STATIONS 4–73
4.4.1.7.6.3.1 PAYLOAD OPERATIONS AND INTEGRATION CENTER 4–73
4.4.1.7.6.4 MISSION CONTROL CENTER-MOSCOW 4–74
4.4.1.7.6.5 CANADIAN SPACE OPERATION CENTER 4–74
4.4.1.7.6.6 JAPANESE SPACE OPERATION CENTER 4–74
4.4.1.7.6.7 EUROPEAN SPACE OPERATION CENTER 4–74
4.4.1.8 FILE AND MEMORY TRANSFER (FMT) 4–74
4.4.1.8.1 FILE TRANSFER 4–75
4.4.1.8.2 FILE UPLINK 4–76
4.4.1.8.2.1 GROUND-TO-CCS FILE UPLINK SCENARIO 4–76
4.4.1.8.2.2 GROUND-TO-CCS FILE UPLINK REQUIREMENTS 4–77
4.4.1.8.2.2.1 SET FILE NAME 4–77
4.4.1.8.2.2.2 FILE TRANSFER 4–78
4.4.1.8.2.2.3 TERMINATE FILE TRANSFER 4–78
4.4.1.8.2.3 FILE DOWNLINK 4–79
4.4.1.8.2.3.1 CCS–TO–GROUND FILE DOWNLINK SCENARIO 4–79
4.4.1.8.2.3.2 SET FILE NAME 4–80
4.4.1.8.2.3.2.1 FILE TRANSFER 4–81
4.4.1.8.2.3.2.2 TERMINATE FILE TRANSFER 4–81
4.4.1.8.2.4 INDIRECT FILE TRANSFERS 4–81
4.4.1.8.2.5 FILE LOAD TO MEMORY 4–82
4.4.1.8.2.6 FILE TRANSFER COMMAND FORMATS 4–82
4.4.1.9 ONBOARD TIME MANAGEMENT 4–82
4.4.1.9.1 PRIMARY C&C MDM TIME MAINTENANCE 4–83
4.4.1.9.1.1 MDM RT TIME MAINTENANCE 4–83
4.4.1.9.1.2 MDM FRAME SYNCHRONIZATION 4–84
4.4.1.9.1.3 RESETTING STATION TIME 4–84
4.4.1.9.1.4 CHANGING TIME SOURCE 4–85
4.4.1.10 LSM AND LSM OVERRIDE 4–85
4.4.1.10.1 STATION MODE DEFINITION 4–85
4.4.1.10.2 LSM CHECKING - SPACE SEGMENT 4–86
4.4.1.10.3 LSM CHECKING - GROUND SEGMENT 4–87
4.5 COMMUNICATIONS AND TRACKING 4–89
4.5.1 S-BAND SYSTEM 4–89
4.5.1.1 HIGH RATE S-BAND COMMAND UPLINK INTERFACE DEFINITION . 4–89
4.5.1.1.1 OVERVIEW 4–89
4.5.1.1.2 COMMAND SEPARATION AT HIGH RATE 4–90
4.5.1.2 S-BAND LOW RATE COMMAND UPLINK INTERFACE DEFINITION . . 4–90
4.5.1.2.1 OVERVIEW 4–90
4.5.1.2.2 COMMAND SEPARATION AT LOW RATE 4–91
4.5.2 SPACE-TO-GROUND SUBSYSTEM (KU-BAND) 4–91
4.5.2.1 HIGH RATE FRAME MULTIPLEXER (HRFM) 4–92
4.5.2.2 HIGH RATE MODEM (HRM) 4–92

4.5.2.3 INTERNAL AUDIO SUBSYSTEM (IAS) 4–92
4.5.2.4 INTERNAL VIDEO SUBSYSTEM 4–92
4.5.2.4.1 VIDEO RECORDING 4–93
4.5.2.4.2 VIDEO DOWNLINK 4–93
4.5.2.4.3 VIDEO INTERFACE UNIT 4–95
4.5.2.5 JEM C&T FOR PRESSURIZED PAYLOADS 4–95
4.5.2.6 APM C&T FOR PRESSURIZED PAYLOADS 4–95
4.5.2.7 CAM C&T FOR PRESSURIZED PAYLOADS 4–95
4.6 THERMAL CONTROL 4–96
4.6.1 PAYLOAD THERMAL CONTROL INTERFACES 4–96
4.6.2 DELETED 4–98
4.6.3 USL INTERNAL ACTIVE THERMAL CONTROL SYSTEM 4–98
4.6.4 JEM INTERNAL THERMAL CONTROL SYSTEM 4–101
4.6.5 APM INTERNAL THERMAL CONTROL SYSTEM 4–102
4.6.6 CAM INTERNAL THERMAL CONTROL SYSTEM 4–104
4.6.7 MPLM 4–104
4.6.7.1 MPLM ATCS DESCRIPTION 4–105
4.6.7.2 MPLM PASSIVE DESIGN 4–111
4.7 ENVIRONMENTS 4–111
4.7.1 ENVIRONMENTAL CONTROL AND LIFE SUPPORT (ECLS) 4–111
4.7.1.1 PRESSURIZED GASES 4–111
4.7.1.1.1 NITROGEN 4–111
4.7.1.1.1.1 ETHYLENE 4–125
4.7.1.1.2 MAJOR CONSTITUENT ANALYZER (MCA) 4–126
4.7.1.2 POTABLE WATER 4–127
4.7.1.2.1 WASTE WATER 4–129
4.7.1.2.2 WATER QUALITY 4–130
4.7.2 TRASH MANAGEMENT 4–135
4.7.3 RADIATION 4–135
4.7.3.1 CHARGED PARTICLE RADIATION 4–135
4.7.3.2 NOMINAL DESIGN ENVIRONMENTS 4–136
4.7.4 ILLUMINATION 4–138
4.8 VACUUM SYSTEMS 4–139
4.8.1 USL VACUUM SYSTEMS 4–139
4.8.1.1 SYSTEM DESCRIPTION 4–139
4.8.1.1.1 VACUUM EXHAUST SYSTEM 4–139
4.8.1.1.2 VACUUM RESOURCE SYSTEM 4–139
4.8.1.2 SYSTEM CAPABILITIES 4–140
4.8.1.2.1 EXHAUST CAPABILITIES 4–140
4.8.1.2.2 THROUGHPUT 4–140
4.8.2 JEM VACUUM SYSTEMS 4–140
4.8.2.1 SYSTEM DESCRIPTION 4–140
4.8.2.1.1 WASTE GAS SYSTEM 4–140
4.8.2.1.2 VACUUM VENT SYSTEM 4–141
4.8.2.2 SYSTEM CAPABILITIES 4–141
4.8.2.2.1 EXHAUST CAPABILITIES 4–141
4.8.2.2.2 THROUGHPUT 4–141

4.8.3	APM VACUUM SYSTEMS	4–141
4.8.3.1	SYSTEM DESCRIPTION	4–141
4.8.3.1.1	WASTE GAS SYSTEM	4–141
4.8.3.1.2	VACUUM VENT SYSTEM	4–142
4.8.3.2	SYSTEM CAPABILITIES	4–142
4.8.3.2.1	EXHAUST CAPABILITIES	4–142
4.8.3.2.2	THROUGHPUT	4–142
4.8.4	VACUUM SYSTEMS OPERATION	4–142
4.8.4.1	FUNCTIONAL OPERATION	4–142
4.8.4.2	VACUUM EXHAUST (WASTE GAS) SYSTEMS OPERATION	4–143
4.8.4.3	VACUUM RESOURCE (VACUUM VENT) SYSTEMS OPERATION	4–143
4.8.5	SYSTEM WETTED MATERIALS COMPATIBILITY ANALYSIS	4–143
4.8.6	VACUUM EXHAUST (WASTE GAS) SYSTEM ACOUSTICS	4–144
4.9	CAUTION AND WARNING / FIRE PROTECTION	4–145
4.9.1	CAUTION AND WARNING	4–145
4.9.1.1	EVENT CLASSIFICATIONS	4–145
4.9.1.1.1	EMERGENCY (CLASS I)	4–145
4.9.1.1.2	WARNING (CLASS II)	4–145
4.9.1.1.3	CAUTION (CLASS III)	4–146
4.9.1.1.4	ADVISORY	4–146
4.9.1.2	PAYLOAD SYSTEM INTERFACE TO THE C&W SYSTEM	4–146
4.9.1.3	PAYLOAD MDM FUNCTIONAL OPERATION (FOR C&W EVENTS)	4–147
4.9.1.3.1	DATA EVALUATION	4–147
4.9.1.3.2	PAYLOAD SAFETY DATA	4–148
4.9.2	FIRE PROTECTION	4–148
4.9.2.1	FIRE PREVENTION	4–149
4.9.2.2	FIRE DETECTION	4–149
4.9.2.2.1	SMOKE DETECTION	4–149
4.9.2.2.2	RACK MAINTENANCE (RACK POWER) SWITCH	4–150
4.9.2.2.3	ALTERNATE FIRE DETECTION	4–154
4.9.2.2.4	FIRE SUPPRESSION	4–155
4.10	MATERIALS	4–156
4.10.1	MATERIALS SELECTION	4–156
4.10.1.1	STRESS CORROSION CRACKING	4–157
4.10.1.2	OFFGASSING OR TOXICITY	4–157
4.10.2	HOOK AND LOOP FASTENERS	4–157
4.10.3	CONTAMINATION CONTROL	4–159
4.10.3.1	CLEANLINESS	4–159
4.10.3.2	ON–ORBIT CLEANING MATERIALS	4–160
4.11	HUMAN FACTORS	4–164
4.11.1	STRENGTH	4–164
4.11.2	BODY ENVELOPE AND REACH ACCESSIBILITY	4–164
4.11.3	HABITABILITY	4–164
4.11.4	STRUCTURAL/MECHANICAL INTERFACES	4–164
4.11.5	CONTROLS AND DISPLAYS	4–164
4.11.6	RESTRAINTS AND MOBILITY AIDS	4–165
4.11.7	IDENTIFICATION LABELING	4–165

4.11.8	CREW SAFETY	4–165
4.11.9	ON–ORBIT ACOUSTICS	4–165
4.11.9.1	INTEGRATED RACK ALLOCATION	4–166
4.11.9.2	SUBRACK ALLOCATION	4–166
4.11.9.3	NON–RACK ALLOCATION	4–166
4.12	STOWAGE	4–166
4.12.1	AMBIENT STOWAGE ACCOMMODATIONS	4–167
4.12.1.1	CARBON DIOXIDE	4–168
4.12.1.1.1	HELIUM	4–169
4.12.1.1.2	ARGON	4–170
4.12.1.1.3	PAYLOAD PROVIDED GAS BOTTLES	4–170
4.12.1.2	ATMOSPHERIC GASES	4–171
4.12.1.2.1	TOTAL AND PARTIAL PRESSURES	4–172
4.12.1.2.2	NITROGEN	4–173
4.12.1.2.3	OXYGEN	4–173
4.12.1.2.4	ATMOSPHERIC CARBON DIOXIDE CONCENTRATION	4–174
4.12.1.2.4.1	CARBON DIOXIDE REMOVAL ASSEMBLY (CDRA)	4–174
4.12.1.2.4.2	ANTICIPATED CARBON DIOXIDE CONCENTRATIONS	4–176
4.12.1.2.5	ATMOSPHERIC HUMIDITY	4–178
4.12.1.2.6	ATMOSPHERIC TEMPERATURE	4–180
4.12.1.2.7	TRACE CONTAMINANT CONTROL	4–181
4.12.2	REFRIGERATED/FROZEN STOWAGE	4–181
4.12.3	LOW TEMPERATURE FROZEN STOWAGE	4–181
4.13	SAFETY	4–181
4.13.1	SAFETY REQUIREMENTS	4–183
4.13.2	BIOMEDICAL INVESTIGATIONS	4–184
4.13.3	CAUTION AND WARNING	4–184
4.13.4	PAYLOAD HAZARD REPORTS	4–185
4.13.5	STANDARD HAZARDS	4–187
4.13.5.1	STRUCTURAL FAILURE	4–200
4.13.5.2	STRUCTURAL FAILURE OF SEALED OR VENTED CONTAINERS	4–200
4.13.5.3	SHARP EDGES	4–200
4.13.5.4	SHATTERABLE MATERIAL RELEASE	4–200
4.13.5.5	FLAMMABLE MATERIALS	4–200
4.13.5.6	MATERIALS OFFGASSING	4–200
4.13.5.7	NONIONIZING RADIATION	4–201
4.13.5.8	BATTERY FAILURE	4–201
4.13.5.9	TOUCH TEMPERATURE	4–202
4.13.5.10	ELECTRICAL POWER DISTRIBUTION	4–202
4.13.5.11	IGNITION OF FLAMMABLE ATMOSPHERES IN PAYLOAD BAY	4–202
4.13.5.12	ROTATING EQUIPMENT	4–202
4.13.5.13	MATING/DEMATING POWER CONNECTORS	4–203
4.13.5.14	CONTINGENCY RETURN AND RAPID SAFING	4–203
4.13.5.15	NON–STANDARD HAZARDS	4–203
4.14	EXPEDITE THE PROCESSING OF EXPERIMENTS TO SPACE STATION (EXPRESS) RACK	4–204
5.0	LAB SUPPORT EQUIPMENT	5–1

5.1	BAR CODE READER	5–2
5.2	BATTERY CHARGER	5–2
5.3	CAMERAS	5–2
5.3.1	ISS GENERAL PURPOSE VIDEO CAMERA	5–2
5.3.2	FILM STILL CAMERAS	5–2
5.3.3	DIGITAL STILL CAMERA	5–2
5.4	REFRIGERATED CENTRIFUGE	5–2
5.5	CLEANING EQUIPMENT	5–3
5.6	DC POWER SUPPLY	5–3
5.7	DIGITAL RECORDING OSCILLOSCOPE, DIGITAL MULTIMETER, PH METER, AND DIGITAL THERMOMETER (COMBINED)	5–3
5.8	DIGITAL THERMOMETER	5–3
5.9	FUNCTION/SWEEP GENERATOR	5–3
5.10	GENERAL PURPOSE IVA TOOLS	5–4
5.11	INCUBATOR	5–4
5.12	MAINTENANCE WORK AREA	5–4
5.13	MASS MEASUREMENT DEVICES	5–6
5.13.1	MICRO MASS MEASUREMENT DEVICE	5–6
5.13.2	SMALL MASS MEASUREMENT DEVICE	5–6
5.14	MICROSCOPES	5–6
5.14.1	COMPOUND MICROSCOPE	5–6
5.14.2	DISSECTING MICROSCOPE	5–6
5.15	PASSIVE DOSIMETER	5–8
5.16	PORTABLE UTILITY LIGHT	5–9
5.17	REFRIGERATOR/FREEZER EQUIPMENT	5–9
5.17.1	CRYO	5–9
5.17.1.1	QUICK/SNAP FREEZER	5–9
5.17.1.2	CRYO STORAGE FREEZER	5–11
5.17.2	MINUS EIGHTY–DEGREE LABORATORY FREEZER (MELFI)	5–12
5.17.3	CREW REFRIGERATED FREEZER	5–13
5.18	RESTRAINTS AND MOBILITY AIDS	5–14
5.18.1	LONG DURATION FOOT RESTRAINT (LDFR)	5–14
5.18.2	SHORT DURATION FOOT RESTRAINT (SDFR)	5–15
5.18.3	ANCHOR FOOT RESTRAINT (AFR)	5–17
5.18.4	SEAT TRACK EQUIPMENT ANCHOR (STEA)	5–18
5.18.5	HANDRAIL EQUIPMENT ANCHOR (HEA)	5–20
5.18.6	ARTICULATING POST ASSEMBLY (APA)	5–22
5.18.7	FIXED LENGTH TETHER (FLT)	5–24
5.18.8	ADJUSTABLE LENGTH TETHER (ALT)	5–26
5.18.9	EQUIPMENT BAG ASSEMBLY (EBA)	5–26
5.18.10	TORSO RESTRAINT ASSEMBLY (TRA)	5–28
5.18.11	HANDRAILS	5–29
5.19	UTILITY OUTLET PANEL (UOP)	5–30

APPENDICES

APPENDIX A	ABBREVIATIONS AND ACRONYMS	A – 1

TABLES

TABLE		PAGE
3.1–I	USL ISPR PAYLOAD LOCATION UTILITY INTERFACES	3–6
3.1–II	JEM ISPR PAYLOAD LOCATION UTILITY INTERFACES	3–7
3.1–III	APM ISPR PAYLOAD LOCATION UTILITY INTERFACES	3–8
3.1–IV	CAM ISPR PAYLOAD LOCATION UTILITY INTERFACES	3–9
3.2.1–I	MPLM ISPR PAYLOAD LOCATION UTILITY INTERFACES	3–12
4.3.2–I	SECONDARY POWER SOURCES AND CAPABILITIES	4–28
4.3.3.2–I	ASSEMBLY COMPLETE ESTIMATED PAYLOAD OPERATIONAL POWER	4–31
4.4.1.1.1–I	ANCILLARY DATA TYPES (EXAMPLES)	4–50
4.4.1.5–I	C&DH PAYLOAD INTERFACE CHARACTERISTICS	4–58
4.5.1.2.1–I	LOW RATE S-BAND COMMAND RATES	4–91
4.6.1–I	ISPR LOCATION ITCS LOOP INTERFACE CHARACTERISTICS	4–97
4.6.1–II	WALL TEMPERATURES	4–98
4.6.7–I	MPLM ATCS CONSTRAINTS AND REQUIREMENTS	4–105
4.6.7.1–I	MPLM MAXIMUM THERMAL LOADS	4–106
4.6.7.1–II	MPLM MISSION PHASE MAXIMUM DURATION	4–106
4.6.7.1–III	MPLM COOLING CONFIGURATIONS	4–107
4.7.1.1.1–I	ATMOSPHERE CONTROL AND SUPPLY LEGEND	4–113
4.7.1.1.1–II	TRACE CONTAMINANTS	4–116
4.7.1.1.2–I	MCA PERFORMANCE REQUIREMENTS	4–126
4.7.1.2.2–I	SUMMARY OF SHUTTLE POSTFLIGHT TANK A WATER ANALYTICAL DATA FOR ALL FLIGHTS, 1991 TO 1994	4–131
4.7.1.2.2–II	ANALYSES OF WATER SAMPLES COLLECTED FROM STS–81 CONTINGENCY WATER COLLECTION (CWC) BAGS TRANSFERRED TO MIR	4–132
4.7.1.2.2–III	WATER QUALITY REQUIREMENTS	4–133
4.7.3.2–I	NOMINAL TOTAL DOSE RATES FOR PRESSURIZED VOLUMES (RAD(SI)/YEAR)	4–136
4.7.3.2–II	PROTON FLUX WITH 1000 MIL ALUMINUM SHIELDING	4–137
4.7.3.2–III	REPRESENTATIVE SEE DEVICE TESTING REQUIREMENTS	4–138
4.7.3.2–IV	HEAVY ION INTEGRAL FLUX EXPRESSED IN PARTICLES/CM2-DAY>LET	4–138
4.10.2–I	PLAIN BACKED HOOK AND LOOP FASTENERS WHICH HAVE FAVORABLE FLAMMABILITY AND OFFGASSING CHARACTERISTICS	4–159
4.10.2–II	ADHESIVE (ACRYLIC BASED) BACKED HOOK AND LOOP FASTENERS WHICH HAVE FAVORABLE FLAMMABILITY AND OFFGASSING CHARACTERISTICS	4–159
4.12.1–I	NITROGEN, GRADE B, REQUIREMENTS AS DELIVERED TO THE SHUTTLE INTERFACE ON THE GROUND (FROM SSP 30573A)	4–168
4.12.1.2.4.2–I	CARBON DIOXIDE CONCENTRATION 24–HOUR AVERAGE EXPOSURE PRIOR TO NODE 3 BEING ON–ORBIT	4–177
4.12.1.2.4.2–II	24–HOUR AVERAGE EXPOSURE TO CO2 CONCENTRATIONS BY ISS CREWMEMBERS AT ASSEMBLY COMPLETE	4–178
4.12.1.2.6–I	ATMOSPHERIC TEMPERATURES IN THE ISS AND THE MPLM	4–180
4.13.5–I	TRANSPORTATION CARRIER CAPABILITIES	4–191

5.0–I LAB SUPPORT EQUIPMENT 5–1

FIGURES

FIGURE		PAGE
3.1–1	ELEMENT ORIENTATION	3–1
3.1–2	USL MODULE INTERNAL LAYOUT	3–2
3.1–3	JEM PRESSURIZED MODULE INTERNAL LAYOUT	3–3
3.1–4	APM INTERNAL LAYOUT	3–4
3.1–5	CAM INTERNAL LAYOUT	3–5
3.2.1–1	MPLM INTERNAL LAYOUT	3–11
3.2.1.1–1	MPLM AISLE STOWAGE CONTAINER	3–13
3.2.1.2–1	RE–SUPPLY STOWAGE PLATFORM (RSP)	3–14
4.1.1–1	INTERNATIONAL PAYLOAD RACK–TO–MODULE INTERFACES	4–2
4.1.1–2	NASDA LIFE SCIENCES RACK UIP CONNECTOR LOCATIONS	4–3
4.1.1–3	NASDA MATERIAL PROCESSING RACK UIP CONNECTOR LOCATIONS	4–4
4.1.1–4	NASA SPECIFIC PANEL UIP CONNECTOR LOCATIONS	4–5
4.1.1–5	ESA SPECIFIC PANEL UIP CONNECTOR LOCATIONS	4–6
4.2.1–1	TIMELINE OF EVENTS FOR ASSESSMENT OF MICROGRAVITY PERFORMANCES	4–12
4.2.1.1–1	QUASI–STEADY STATE MICROGRAVITY CONTOURS DUE TO GRAVITY GRADIENT AND ONCE–PER–ORBIT ROTATION ACCELERATIONS	4–13
4.2.1.1–2	DRAG ACCELERATION PROFILE OVER ONE ORBIT FOR ASSEMBLY COMPLETE CONFIGURATION	4–15
4.2.1.2–1	MAXIMUM MICROGRAVITY VIBRATION ENVIRONMENT DURING MICROGRAVITY PERIODS	4–16
4.2.1.4–1	ISS SYSTEM COMBINED VIBRATORY ACCELERATION LIMITS (WITHOUT PAYLOADS)	4–17
4.2.1.5–1	NON–ISOLATED RACK VIBRATION ASSESSMENT (MICRO–G VS HZ)	4–18
4.3–1	ELECTRICAL POWER SYSTEM	4–24
4.3.1–1	MBSU POWER DISTRIBUTION	4–25
4.3.2–1	SECONDARY POWER SYSTEM	4–27
4.3.2–2	ELECTRICAL POWER SYSTEM INTERFACE LOCATIONS	4–28
4.3.3.1–1	TYPICAL ISS ANNUAL SOLOR BETA VARIATION	4–30
4.3.3.2–1	ISS SOLAR ARRAY CONFIGURATION AND PRIMARY USL POWER SOURCES	4–33
4.3.4.1–1	ISS SYSTEM REPRESENTATIVE ELECTRICAL SCHEMATIC	4–34
4.4–1	C&DH PAYLOAD ARCHITECTURE BY MODULE LAYOUT	4–44
4.4–2	C&DH PAYLOAD ARCHITECTURE BY FUNCTIONAL DATA FLOW	4–44
4.4.1.1.1–1	PAYLOAD HEALTH AND STATUS BIT ALLOCATION FORMAT	4–48
4.4.1.2.4–1	PCSCDS EXTERNAL INTERFACES	4–55
4.4.1.7.5–1	COMMAND RESPONSE FORMAT	4–70
4.5.2.4–1	INTERNAL VIDEO SUBSYSTEM	4–94
4.6.3–1	SIMPLIFIED USL ITCS	4–100
4.6.4–1	JEM IATCS FUNCTIONAL SCHEMATIC	4–101
4.6.5–1	APM IATCS FUNCTIONAL SCHEMATIC	4–103

4.6.7.1–1	GROUND SUPPORT COOLING CONFIGURATION OF THE MPLM	4–108
4.6.7.1–2	CARGO BAY COOLING CONFIGURATION OF THE MPLM	4–109
4.6.7.1–3	ON–ORBIT COOLING CONFIGURATION OF THE MPLM	4–110
4.7.1.1.1–1	AIRLOCK ACS SCHEMATIC SHOWING PRESSURIZED NITROGEN AND OXYGEN SUBSYSTEMS	4–114
4.7.1.1.1–2	USL ACS CHEMATIC SHOWING THE NITROGEN AND OXYGEN SUBSYSTEMS	4–115
4.7.1.1.1–3	TRACE CONTAMINANT CONTROL SYSTEM (TCCS) SCHEMATIC	4–124
4.7.1.2–1	WATER CYCLE OF US LIFE SUPPORT SYSTEM	4–129
4.9.1.2–1	DATA TRANSMISSION ROUTES FUNCTIONAL SCHEMATIC	4–147
4.9.1.3.1–1	LIMIT CHECK TABLE FIELDS	4–148
4.9.2.2.2–1	RACK MAINTENANCE SWITCH ASSEMBLY (RMSA)	4–152
4.9.2.2.3–1	PREFERRED FIRE DETECTION SCHEME, SMOKE DETECTION	4–154
4.9.2.2.3–2	VOLUMES WHICH CANNOT USE THE RACK SMOKE DETECTOR AND MUST PROVIDE AN ALTERNATE MEANS OF FIRE DETECTION	4–155
4.12.1.1–1	COMMON GAS SUPPLY EQUIPMENT (CGSE) RACK IN THE JEM	4–169
4.12.1.2.1–1	ATMOSPHERIC PRESSURE REGIME FOR ISS	4–172
4.12.1.2.1–2	COMPARISON OF ISS, HOUSTON AND DENVER OXYGEN PARTIAL PRESSURES	4–173
4.12.1.2.4.1–1	SCHEMATIC OF THE CARBON DIOXIDE REMOVAL ASSEMBLY (CDRA)	4–174
4.12.1.2.4.1–2	EXAMPLE OF THE DYNAMIC EFFECT OF THE CDRA HALF–CYCLE ON USL CABIN ATMOSPHERIC CARBON DIOXIDE CONCENTRATION	4–176
4.12.1.2.5–1	TEMPERATURE AND HUMIDITY CONTROL SUBYSYSTEM	4–179
4.12.1.2.5–2	CABIN RELATIVE HUMIDITY AS A FUNCTION OF CHX SENSIBLE ‘HEAT LOAD	4–179
4.13.4–1	PAYLOAD HAZARD REPORT	4–186
4.13.5–1	CARGO TRANSFER BAG	4–188
4.13.5–2	ISS STOWAGE TRAYS	4–189
4.13.5–3	M–BAGS	4–190
4.13.5–4	RESUPPLY STOWAGE RACK	4–192
4.13.5–5	RESUPPLY STOWAGE PLATFORM 1	4–193
4.13.5–6	RESUPPLY STOWAGE PLATFORM 2	4–194
4.13.5–7	ZERO–G STOWAGE RACK	4–195
4.13.5–8	FLIGHT STANDARDIZED HAZARD CONTROL REPORT	4–196
4.14–1	EXPRESS RACK	4–205
5.12–1	MAINTENANCE WORK AREA	5–5
5.13.2–1	SMALL MASS MEASUREMENT DEVICE	5–7
5.15–1	PASSIVE DOSIMETER READER/ANNEALER	5–8
5.17.1.1–1	QUICK/SNAP CRYOGENIC FREEZER	5–10
5.17.1.2–1	CRYOGENIC STORAGE FREEZER	5–11
5.17.2–1	MINUS EIGHTY–DEGREE LABORATORY FREEZER (MELFI)	5–13
5.17.3–1	CREW REFRIGERATED FREEZER	5–14
5.18.1–1	LONG DURATION FOOT RESTRAINT ASSEMBLY	5–15
5.18.2–1	SHORT DURATION FOOT RESTRAINT (SDFR)	5–16
5.18.3–1	ANCHOR FOOT RESTRAINT (AFR)	5–17
5.18.3–2	ANCHOR FOOT RESTRAINT - INSTALLATION CONCEPT	5–18
5.18.4–1	SEAT TRACK EQUIPMENT ANCHOR (STEA)	5–19

5.18.4–2	SEAT TRACK EQUIPMENT ANCHOR – INSTALLATION CONCEPT . .	5–20
5.18.5–1	HANDRAIL EQUIPMENT ANCHOR (HEA)	5–21
5.18.5–2	HANDRAIL EQUIPMENT ANCHOR – INSTALLATION CONCEPT	5–22
5.18.6–1	ARTICULATING POST ASSEMBLY (APA)	5–23
5.18.6–2	ARTICULATING POST ASSEMBLY – INSTALLATION CONCEPT	5–24
5.18.7–1	FIXED LENGTH TETHER (FLT)	5–25
5.18.8–1	ADJUSTABLE LENGTH TETHER	5–27
5.18.9–1	EQUIPMENT BAG ASSEMBLY (EBA)	5–28
5.18.10–1	TORSO RESTRAINT ASSEMBLY (TRA)	5–29
5.18.11–1	HANDRAILS	5–30
5.19–1	UTILITY OUTLET PANEL (UOP) MECHANICAL DRAWING	5–32

1.0 INTRODUCTION

The ISS is an international, Earth-orbiting, research facility. Its mission is to conduct scientific, technological, and commercial application research in a microgravity environment with an emphasis on long duration activities. People and organizations conducting scientific and commercial research and development activities on board the ISS are called Users. Users may originate either from government, academic, and commercial sectors of the United States (U.S.) or international participants.

This PAH serves as a guide for Users of the ISS resources allocated to pressurized payloads. It constitutes an integral part of the overall ISS PAH, addressing the various laboratory modules and other parts of the ISS infrastructure where payloads may be located.

1.1 PURPOSE

The purpose of this PAH is to provide sufficient information on the interfaces, accommodations, capabilities, performance characteristics, and constraints specific to pressurized payloads. This will enable Users to understand how payload equipment can be accommodated inside the pressurized volume of the ISS. A payload is a discrete set of equipment, software, specimens, and/or other items that are designated and treated as a collective whole in support of one or more experiments or commercial objectives.

1.2 SCOPE

This document addresses interfaces and accommodations related to pressurized payloads developed and integrated by all Partners. Information contained within this document is applicable to the fully configured Space Station unless otherwise noted.

1.3 PRECEDENCE

This guideline document contains no requirements; therefore, ”precedence” is not applicable.

1.4 DELEGATION OF AUTHORITY

(TBD #1)

(This Page Intentionally Left Blank)

2.0 DOCUMENTS

2.1 APPLICABLE DOCUMENTS

The following documents may include documents, specifications, standards, guidelines, procedures, handbooks, and other special publications. Unless the exact issue and date are identified, the "Current Issue" cited in the contract Applicable Documents List (ADL) applies. Inclusion of applicable documents herein does not in any way supersede the contractual order of precedence.

2.1.1 GOVERNMENT DOCUMENTS

1F01444	Approved Materials List – Space Station
ANSI Z 136.1	American National Standard for Safe Use of Lasers
EM NO. TCC–0084B	TCCS Contaminant Removal Performance
FED–STD–209	Airborne Particulate Cleanliness Classes in Cleanrooms and Clean Zones
ICD–A–21350	Shuttle Orbiter/MPLM Cargo Element Interfaces
JSC 20483	Human Research Policy and Procedures
JSC 20584	Spacecraft Maximum Allowable Concentrations for Space Station Contaminants
JSC 27260	Decal Process Document Catalog
K–STSM–14.2.1	KSC Payload Facility Contamination Control Requirements/Plan
KCI–HB–5340.1	Payload Facility Contamination Control Implementation Plan
KHB 1700.7	Space Shuttle Payload Ground Safety Handbook
MAPTIS	Materials and Processes Technical Information System (Note: Electronic database maintained by MSFC)
MIL–HDBK–407	Contamination Control Technology Precision Cleaning Methods and Procedures
MIL–STD–1246	Product Cleanliness Levels and Contamination Control Program

MIL–STD–1553	Interface Standard for Digital Time Division Command/Response Multiplex Data Bus
MIL–STD–1564	Procedure for Calibration and Analysis of Trace Contaminants in Aviator's Breathing Oxygen by Infrared Spectroscopy
MLM–HB–A1–0001	MPLM Cargo Accommodations Handbook
MSFC-HDBK-527	Materials Selection List for Space Hardware Systems
MSFC-SPEC-522B	Design Criteria for Controlling Stress Corrosion Cracking
NASA-STD-3000	Man-System Integration Standards
NASA–STD–5003	Fracture Control Requirements for Payloads Using the Space Shuttle
NASA TM 102179	Selection of Wires and Circuit Protection Devices for STS Orbiter Vehicle, Payload Electrical Circuits
NASA TM 108497	Trace Chemical Contaminant Generation Rates for Spacecraft Contamination Control System Design
NASA/TP–1998–207978	Elements of Spacecraft Cabin Air Quality Control Design
NHB 8060.1C	Flammability, Odor, and Offgassing Requirements and Test Procedures for Materials in Environments that Support Combustion
NIH 85–23	Guide for the Care and Use of Laboratory Animals for Space Flight Investigations
NSTS 07700, Volume XIV	Space Shuttle System Payload Accommodations
NSTS 07700, Volume XIX APP7	System Description Ad Design Data Extravehicular Activities
NSTS 1700.7	Safety Policy and Requirements for Payloads Using the Space Transportation System
NSTS 1700.7B, ISS Addendum	Safety Policy and Requirements for Payloads Using the International Space Station
NSTS 13830C	Payload Safety Review and Data Submittal Requirements for Payloads Using the Space Shuttle International Space Station
NSTS 18798B	Interpretations of NSTS/ISS Payload Safety Requirements

NSTS 21000–IDD–MDK	Middeck Payloads Interface Definition Document for Middeck Accommodations
NSTS 21288	Required Data/Guidelines for Payload/Shuttle Electromagnetic Compatibility Analysis
NSTS 22648	Flammability Configuration Analysis for Spacecraft Applications
SN–C–0005	Contamination Control Requirements for the Space Shuttle Program
SSP 30237	Space Station Electromagnetic Emission and Susceptibility
SSP 30238	Space Station Electromagnetic Techniques
SSP 30240	Space Station Grounding Requirements
SSP 30242	Space Station Cable/Wire Design and Control Requirements
SSP 30243	Space Station Systems Requirements for Electromagnetic Compatibility
SSP 30245	Space Station Electrical Bonding Requirements
SSP 30257:004	IVA Restraints and Mobility Aids Standard ICD
SSP 30262:010	Space Station Program Portable Fire Extinguisher Standard Interface Control Document
SSP 30425	Space Station Program Natural Environment Definition for Design
SSP 30512	Space Station Radiation Design Environment
SSP 30513	Space Station Ionizing Radiation Environment Effects test and Analysis Techniques
SSP 30573	Space Station Program Fluid Procurement and Use Control Specification
SSP 41002	Electrical Characteristics of the Maintenance Power Switch Control
SSP 41154	Software Interface Control Document Part 1 United States On–Orbit Segment to United States Ground Segment Command and Telemetry
SSP 41158	Software Interface Control Document Part 1 United States On–Orbit Segment to International Ground System Segment Ku–Band Telemetry Formats

SSP 41175–02	Software Interface Control Document Part 1 Station Management and Control to International Space Station Book 2, General Software Interface Requirements
SSP 50005	International Space Station Flight Crew Integration Standard (NASA–STD–3000)
SSP 50193–1	Software Interface Control Document, Part 1 Payload Multiplexer/Demultiplexer to ISS Book 1, International Standard Payload
SSP 50251	ARIS–to–Module Interface Control Document
SSP 52005	ISS Payload Flight Equipment Requirements and Guidelines for Safety Critical Structures
SSP 52050	Software Interface Control Document Part 1, International Standard Payload Rack to International Space Station
SSP 57000	Pressurized Payloads Interface Requirements Document
SSP 57005	ARIS–to–Payload Interface Control Document
SSP 57006	ARIS User's Handbook
SSP 57007	International Standard Payload Rack (ISPR) Structural Integrator's Handbook
SSP 57212	Minus Eight Degree Laboratory Freezer for the ISS (MELFI)
SSQ 21654	Cable, Single Fiber, Multimode, Space Quality, General Specification for International Space Station Program
TM 102179	Selection of Wires and Circuit Protective Devices for STS Orbiter Vehicle Payload Electrical Circuits

2.1.2 NON-GOVERNMENT DOCUMENTS

D684–10056–1	ISS Program Prime Contractor Software Standards and Procedures Specification
D684–10299	ISS Program Caution and Warning System Description Document

D684–10500–3	ISS Program Command & Data Handling Architecture Description Document, Vol 3 Software Architecture
ESA PSS–01–701	Data For Selection of Space Materials
J2R–724	IHI NASDA ISPR
JMAPTIS	NASDA Materials and Processes Technical Information System
MDC 91W 5023	Spacehab Experiment Interface Definition Document
TCC–0084B	Lockheed Engineering Memo – Subject: TCCS Contamination Removal Performance

(This Page Intentionally Left Blank)

3.0 OVERVIEW

3.1 INTERNATIONAL SPACE STATION (ISS) PAYLOAD ACCOMMODATIONS

The International Space Station (ISS) pressurized modules provide a crew "shirt-sleeve" work environment for conducting scientific and technological research. The orientation of the individual ISS elements is shown in Figure 3.1–1. The basic accommodation for payloads in the pressurized modules is the International Standard Payload Rack (ISPR) location. There are a total of 37 ISPR locations throughout Station: 13 in the United States Laboratory (USL), 10 in the Japanese Experiment Module (JEM) pressurized module, 10 in the Attached Pressurized Module (APM), and four in the Centrifuge Accommodations Module (CAM) as shown in Figures 3.1–1 through 3.1–5. A window has been added to the USL at ISPR location LAB1D3. The Russian Space Agency (RSA) modules do not accommodate ISPRs. The utility interfaces that are available are tabulated by ISPR/Module location, as shown in Tables 3.1–I through 3.1–IV.

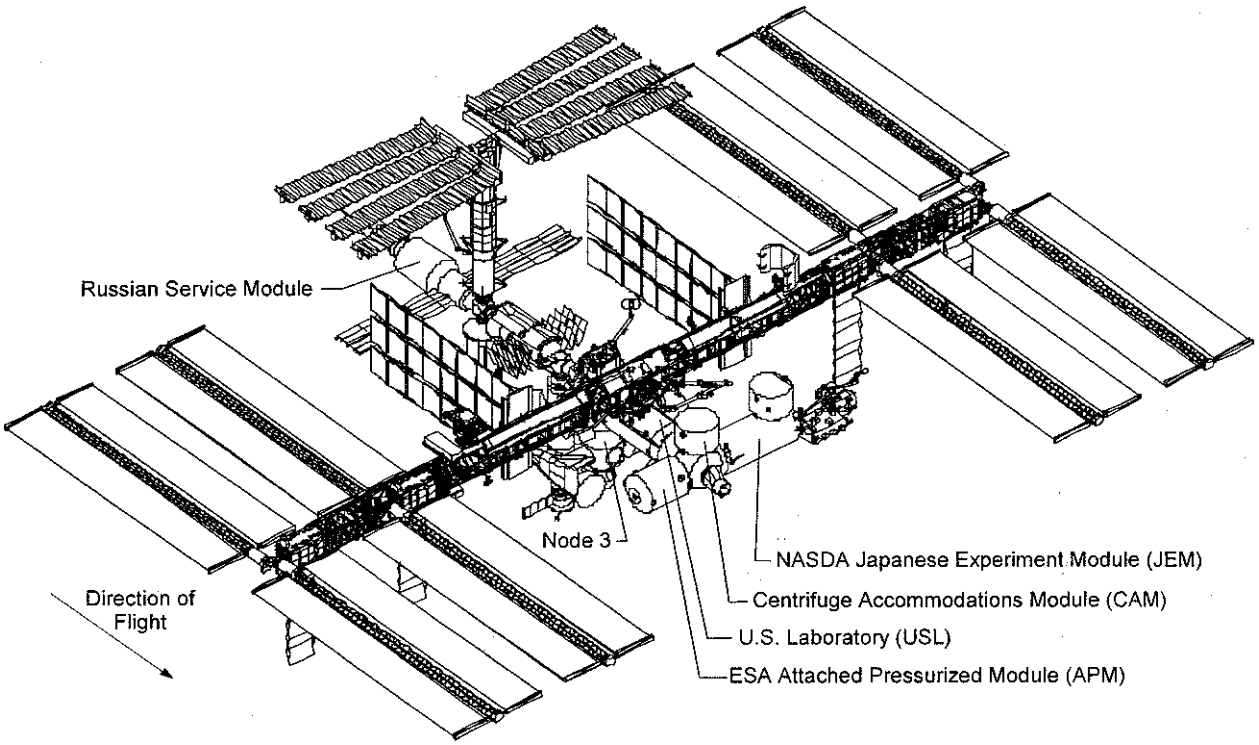

FIGURE 3.1–1 ELEMENT ORIENTATION

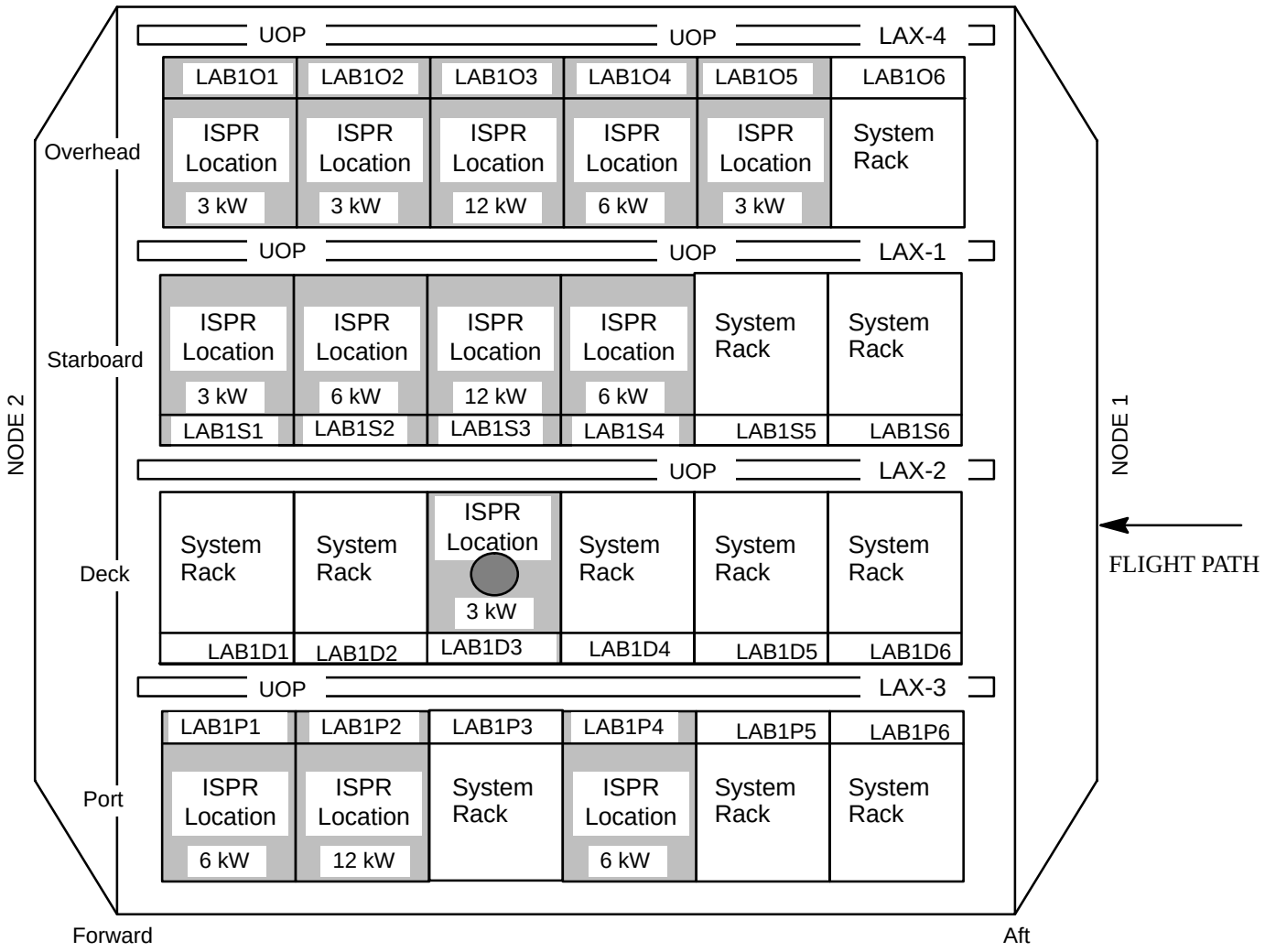

NOTE: WINDOW LOCATED BEHIND RACK LOCATION LAB1D3

FIGURE 3.1–2 USL MODULE INTERNAL LAYOUT

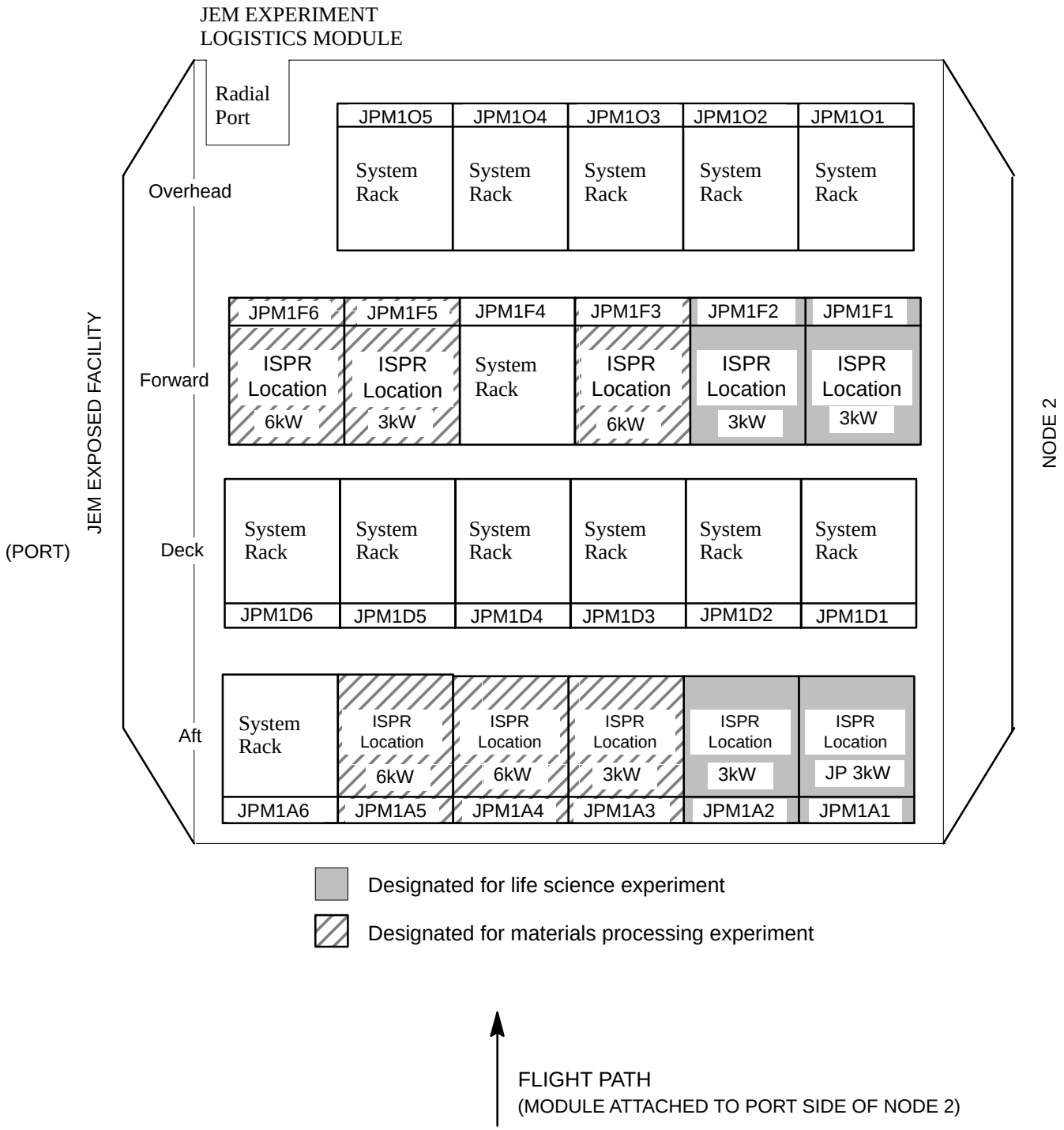

FIGURE 3.1–3 JEM PRESSURIZED MODULE INTERNAL LAYOUT

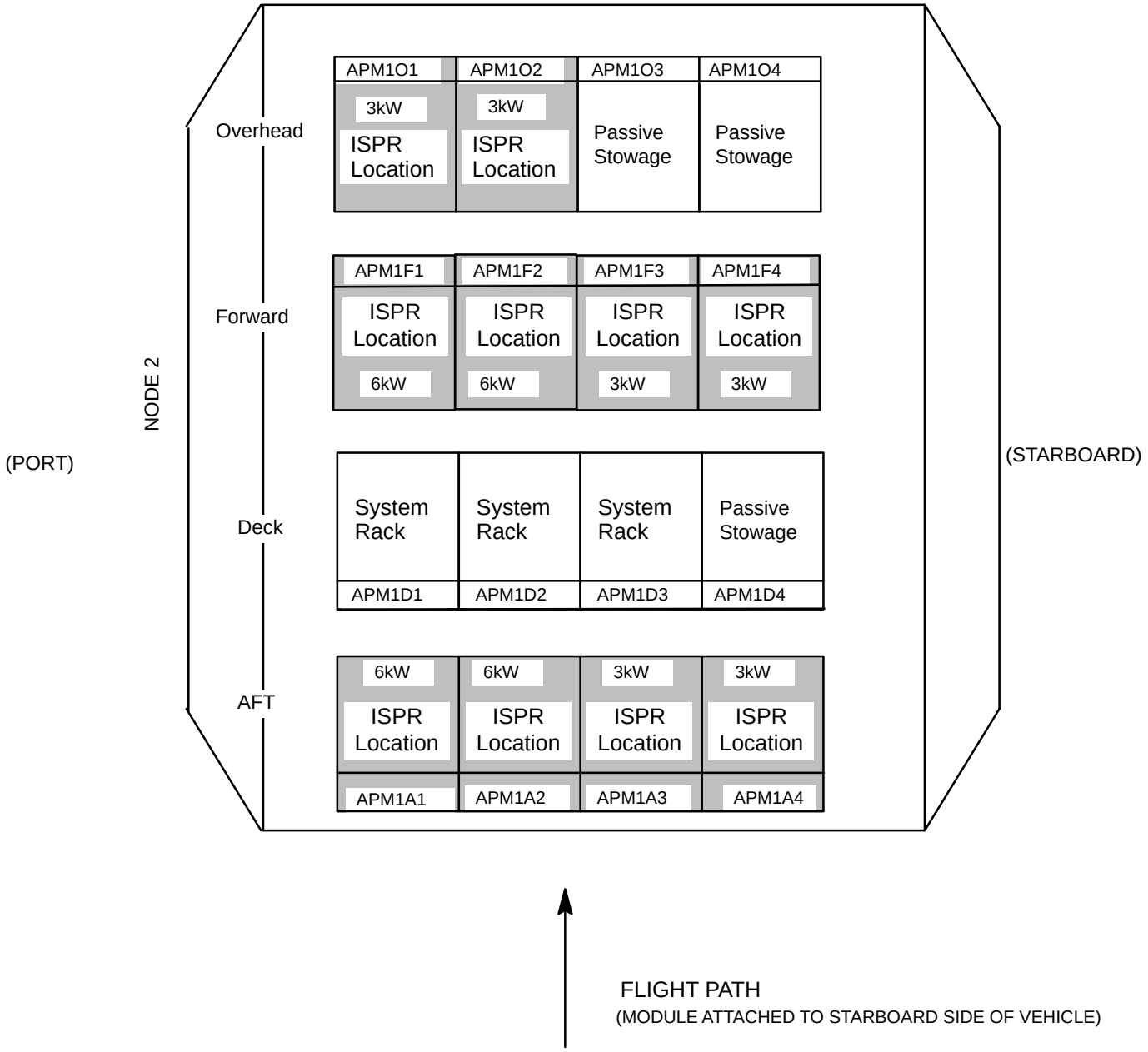

FIGURE 3.1–4 APM INTERNAL LAYOUT

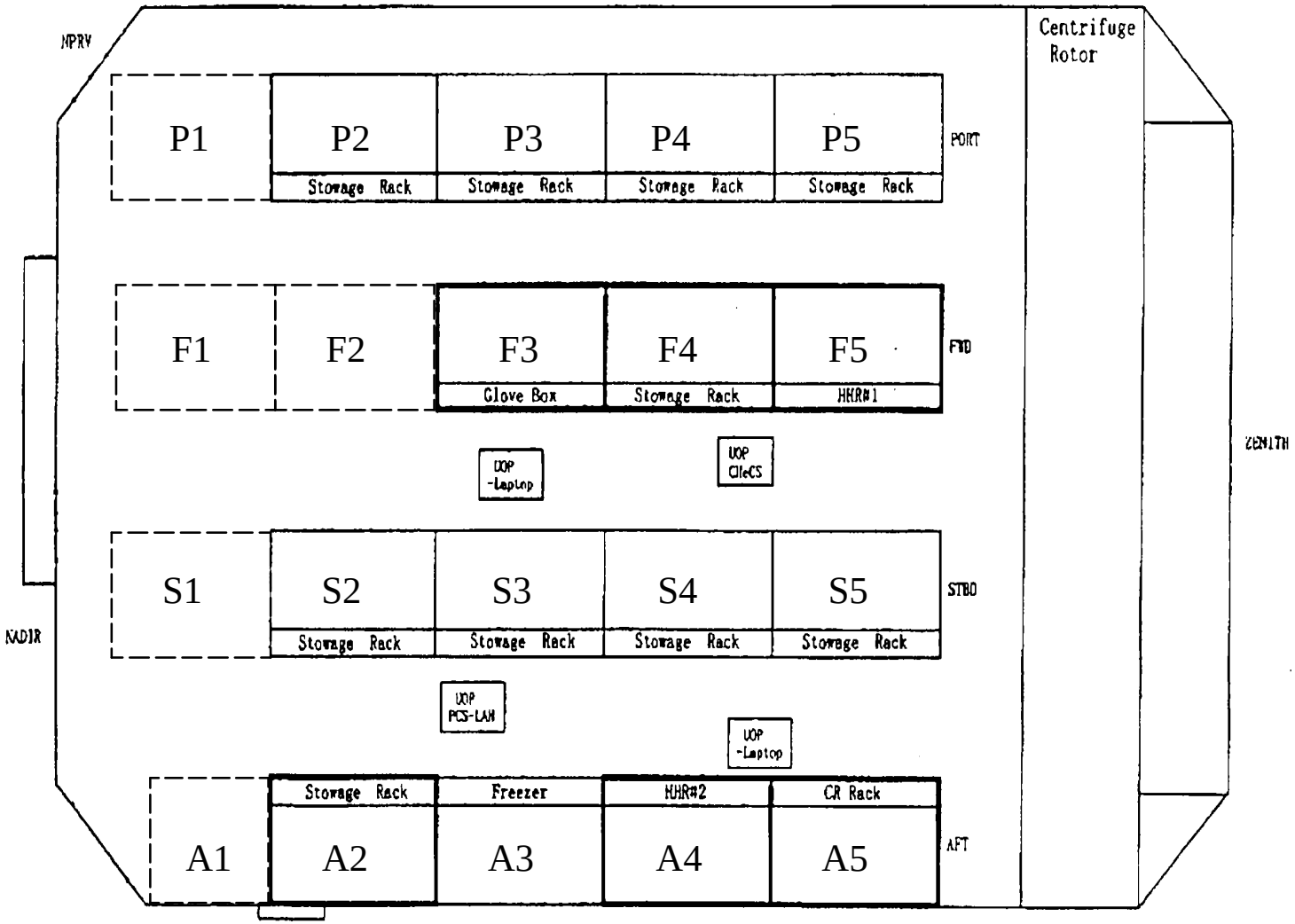

Dotted line is closeout panel, not ISPR

FIGURE 3.1–5 CAM INTERNAL LAYOUT

TABLE 3.1–I USL ISPR PAYLOAD LOCATION UTILITY INTERFACES

ISPR Location(1) / Utilities(2)	Power, kW (3)	Essential/Auxiliary Power	High Rate Data Link	Medium Rate Data Link (LAN–1)	Medium Rate Data Link (LAN–2)	1553 Bus A	1553 Bus B	Time Distribution(4)	Video/Sync Input (6)	Video Output (6)	Water Cooling (Mod)	Water Cooling (Low)	Waste Gas	Vacuum Resource	Maintenance Switch/Smoke Detector	GN_2 (5)	Ar (5)	He (5)	CO_2 (5)
LAB1O1	3	X	X	X	X	X	X	X	X	X	X	X	X	X	X	X	–	–	–
LAB1O2	3	X	X	X	X	X	X	X	X	X	X	X	X	X	X	X	–	–	–
LAB1O3	12	X	X	X	X	X	X	X	X	X	X	X	X	X	X	X	–	–	–
LAB1O4	6	X	X	X	X	X	X	X	X	X	X	X	X	X	X	X	–	–	–
LAB1O5	3	X	X	X	X	X	X	X	X	X	X	X	X	X	X	X–	–	–	
LAB1S1	3	X	X	X	X	X	X	X	X	X	X	X	X	X	X	X	–	–	–
LAB1S2	6	X	X	X	X	X	X	X	X	X	X	X	X	X	X	X	–	–	–
LAB1S3	12	X	X	X	X	X	X	X	X	X	X	X	X	X	X	X	–	–	–
LAB1S4	6	X	X	X	X	X	X	X	X	X	X	X	X	X	X	X	–	–	–
LAB1D3	3	X	X	X	X	X	X	X	X	X	X	X	X	–	X	X	–	–	–
LAB1P1	6	X	X	X	X	X	X	X	X	X	X	X	X	–	X	X	–	–	–
LAB1P2	12	X	X	X	X	X	X	X	X	X	X	X	X	–	X	X	–	–	–
LAB1P4	6	X	X	X	X	X	X	X	X	X	X	X	X	–	X	X	–	–	–

(1) LAB = USL; O = Overhead; S = Starboard; D = Deck; P = Port

(2) Utility control (i.e., valves, flow adjustors, switches, and circuit protection) is provided at each rack location on the module side of the interface unless otherwise noted. Also, cabin air and wireless audio are provided to all locations.

(3) The 12-kW supply is via two 6-kW power feeds. Payload isolation required at all times between each 6–kW feed. Essential/Auxilliary power will be supplied via either feed.

(4) Implemented via the MIL-STD-1553B bus.

(5) Valve located on payload side of the interface.

(6) Pulse Modulated Optical Signal.

TABLE 3.1–II JEM ISPR PAYLOAD LOCATION UTILITY INTERFACES

ISPR Location(1) / Utilities(2)	Power, kW (3)	Essential/Auxiliary Power	High Rate Data Link	Medium Rate Data Link (LAN–1)	Medium Rate Data Link (LAN–2)	1553 Bus A (4)	1553 Bus B	Time Distribution	Video/Sync Input (6)	Video Output (6)	Water Cooling (Mod)	Water Cooling (Low)	Waste Gas	Vacuum Resource	Maintenance Switch/Smoke Detector	GN_2 (5)	Ar (5)	He (5)	CO_2 (5)
JPM1A1	3	X	X	–	X	X	X	X	X	X	X	X	X	–	X	X	–	–	X
JPM1A2	3	X	X	–	X	X	X	X	X	X	X	X	X	–	X	X	–	–	X
JPM1A3	3	X	X	–	X	X	X	X	X	X	X	–	X	X	X	X	X	X	–
JPM1A4	6	X	X	–	X	X	X	X	X	X	X	–	X	X	X	X	X	X	–
JPM1A5	6	X	X	–	X	X	X	X	X	X	X	–	X	X	X	X	X	X	–
JPM1F1	3	X	X	–	X	X	X	X	X	X	X	X	X	–	X	X	–	–	X
JPM1F2	3	X	X	–	X	X	X	X	X	X	X	X	X	–	X	X	–	–	X
JPM1F3	6	X	X	–	X	X	X	X	X	X	X	–	X	X	X	X	X	X	–
JPM1F5	3	X	X	–	X	X	X	X	X	X	X	–	X	X	X	X	X	X	–
JPM1F6	6	X	X	–	X	X	X	X	X	X	X	–	X	X	X	X	X	X	–

(1) JPM= JEM Pressurized Module; A = Aft; F = Forward
(2) Utility control (i.e., valves, flow adjustors, switches, and circuit protection) is provided at each rack location on the module side of the interface unless otherwise noted. Also, cabin air and wireless audio are provided to all locations.
(3) Essential/Auxilliary power will be supplied via either feed.
(4) Implemented via the MIL-STD-1553B bus.
(5) Valve located on payload side of the interface.
(6) Electrical Video Signal.

TABLE 3.1–III APM ISPR PAYLOAD LOCATION UTILITY INTERFACES

ISPR Location(1) / Utilities(2)	Power, kW (3)	Essential/Auxiliary Power	High Rate Data Link	Medium Rate Data Link (LAN–1)	Medium Rate Data Link (LAN–2)	1553 Bus A (4)	1553 Bus B	Time Distribution	Video/Sync Input (6)	Video Output (6)	Water Cooling (Mod)	Water Cooling (Low)	Waste Gas	Vacuum Resource	Maintenance Switch/Smoke Detector	GN_2 (5)	Ar (5)	He (5)	CO_2 (5)
APM1O1	3	X	X	X	X	X	X	X	X	X	X	–	X	–	X	X	–	–	–
APM1O2	3	X	X	X	X	X	X	X	X	X	X	–	X	–	X	X	–	–	–
APM1A1	6	X	X	X	X	X	X	X	X	X	X	–	X	X	X	X	–	–	–
APM1A2	6	X	X	X	X	X	X	X	X	X	X	–	X	X	X	X	–	–	–
APM1A3	3	X	X	X	X	X	X	X	X	X	X	–	X	X	X	X	–	–	–
APM1F4	3	X	X	X	X	X	X	X	X	X	X	–	X	X	X	X	–	–	–
APM1F1	6	X	X	X	X	X	X	X	X	X	X	–	X	X	X	X	–	–	–
APM1F2	6	X	X	X	X	X	X	X	X	X	X	–	X	X	X	X	–	–	–
APM1F3	6	X	X	X	X	X	X	X	X	X	X	–	X	X	X	X	–	–	–
APM1F4	3	X	X	X	X	X	X	X	X	X	X	–	X	X	X	X	–	–	–

(1) APM= Attached Pressurized Module; O = Overhead; A = Aft; F = Forward
(2) Utility control (i.e., valves, flow adjustors, switches, and circuit protection) is provided at each rack location on the module side of the interface unless otherwise noted. Also, cabin air and wireless audio are provided to all locations.
(3) Essential/Auxiliary power will be supplied via either feed.
(4) Implemented via the MIL-STD-1553B bus.
(5) Valve located on payload side of the interface.
(6) Pulse Modulated Optical Signal

TABLE 3.1–IV CAM ISPR PAYLOAD LOCATION UTILITY INTERFACES

ISPR Location(1) / Utilities(2)	Power, kW (3)	Essential/Auxiliary Power	High Rate Data Link	Medium Rate Data Link (LAN–1)	Medium Rate Data Link (LAN–2)	1553 Bus A (4)	1553 Bus B	Time Distribution	Video/Sync Input (6)	Video Output (6)	Water Cooling (Mod)	Water Cooling (Low)	Waste Gas	Vacuum Resource	Maintenance Switch/Smoke Detector	GN_2 (5)	Ar (5)	He (5)	CO_2 (5)
CAM1F3	3	X	X	X	–	X	X	X	X	X	X	X			X	X			
CAM1F5	3	X	X	X	–	X	X	X	X	X	X	X			X				
CAM1A3	3	X			–	X	X	X			X	X			X	X			
CAM1A4	3	X	X	X	–	X	X	X	X	X	X	X			X				
CR	2@																		
	3		X	X	–	X	X	X	X	X	X	X			X				
							(TBD #2)												

(1) CAM = Centriguge Accommodations Module; A = Aft; F = Forward
(2) Utility control (i.e., valves, flow adjustors, switches, and circuit protection) is provided at each rack location on the module side of the interface unless otherwise noted. Also, cabin air and wireless audio are provided to all locations.
(3) Essential/Auxiliary power will be supplied via either feed.
(4) Implemented via the MIL-STD-1553B bus.
(5) Valve located on payload side of the interface.
(6) Pulse Modulated Optical Signal

3.2 PAYLOAD TRANSPORTATION

3.2.1 MINI–PRESSURIZED LOGISTICS MODULE

Transportation of pressurized payloads (including supplies and products) to and from ISS primarily occurs in the Mini-Pressurized Logistics Module (MPLM). The MPLM provides 16 rack positions, plus an additional volume for aisle stowage containers, as shown in Figure 3.2.1–1, MPLM Internal Layout. Volume available to payloads varies by flight. Five of the rack locations are active (powered) positions and the remaining 11 locations are passive. Six of the 11 passive locations can accommodate Active Rack Isolation System (ARIS) equipped racks. While the ARIS equipped racks are in the MPLM flight system, the ARIS is not activated. The standard and optional utility interfaces that are available in the MPLM are given in Table 3.2.1–I.

Additional MPLM information can be found in the MPLM Cargo Accommodations Handbook (MCAH) (reference MLM–HB–A1–0001) and in the Shuttle Orbiter/MPLM Cargo Element Interfaces (reference ICD–A–21350).

3.2.1.1 AISLE STOWAGE CONTAINER

The MPLM Flight System is capable of accommodating and transporting up to four Aisle Stowage Containers (ASCs), as shown in Figure 3.2.1.1–1. The ASCs are mounted to the front face of the rack structures (i.e., one ASC per rack).

During the active missions, the two forward bay rack location are dedicated to active racks, which may require late access operations. Therefore ASCs included in the flight manifest can be accommodated in the aft two bays, with the constraint that the ASCs must be installed on opposite module sides (i.e., racks facing each other, port/starboard or floor/ceiling). In the event of passive missions, or active flight manifests including cargo which does not require late access, any two opposite racks for each bay can accommodate ASCs.

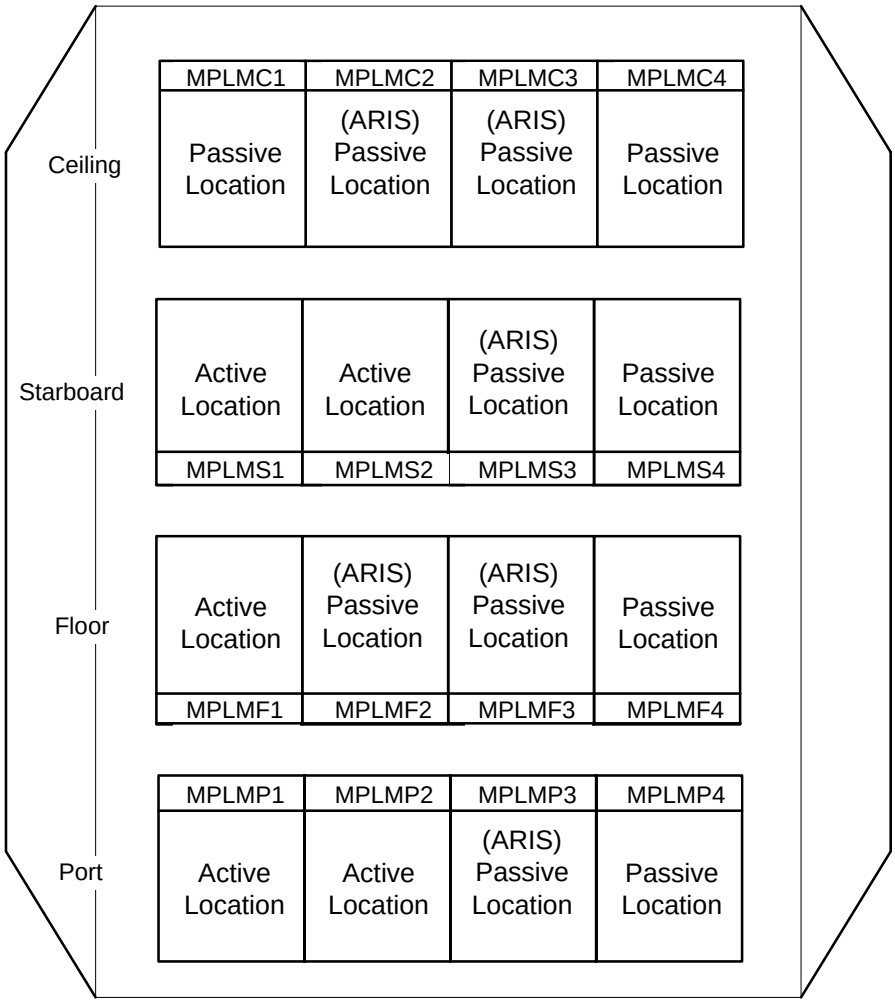

NOTE: Active rack locations can also accommodate passive racks.

FIGURE 3.2.1–1 MPLM INTERNAL LAYOUT

TABLE 3.2.1–I MPLM ISPR PAYLOAD LOCATION UTILITY INTERFACES

ISPR Location(1) / Utilities(2)	Power, kW (3)	Essential/Auxiliary Power	High Rate Data Link	Medium Rate Data Link (LAN–1)	Medium Rate Data Link (LAN–2)	1553 Bus A (4)	1553 Bus B	Time Distribution	Video/Sync Input (6)	Video Output (6)	Water Cooling (Mod)	Water Cooling (Low)	Waste Gas	Vacuum Resource	Maintenance Switch/Smoke Detector	GN_2 (5)	Ar (5)	He (5)	CO_2 (5)
MPLMC1	–	–	–	–	–	–	–	–	–	–	–	–	–	–	–	–	–	–	–
MPLMC2	–	–	–	–	–	–	–	–	–	–	–	–	–	–	–	–	–	–	–
MPLMC3	–	–	–	–	–	–	–	–	–	–	–	–	–	–	–	–	–	–	–
MPLMC4	–	–	–	–	–	–	–	–	–	–	–	–	–	–	–	–	–	–	–
MPLMS1	.598	–	–	–	–	X	X	X	–	–	–	X	–	–	–	–	–	–	–
MPLMS2	1.05	–	–	–	–	X	X	X	–	–	–	X	–	–	–	–	–	–	–
MPLMS3	–	–	–	–	–	–	–	–	–	–	–	–	–	–	–	–	–	–	–
MPLMS4	–	–	–	–	–	–	–	–	–	–	–	–	–	–	–	–	–	–	–
MPLMF1	.598		–	–	–	X	X	X	–	–	–	X	–	–	–	–	–	–	–
MPLMF2	–	–	–	–	–	–	–	–	–	–	–	–	–	–	–	–	–	–	–
MPLMF3	–	–	–	–	–	–	–	–	–	–	–	–	–	–	–	–	–	–	–
MPLMF4	–	–	–	–	–	–	–	–	–	–	–	–	–	–	–	–	–	–	–
MPLMP1	.598	–	–	–	–	X	X	X	–	–	–	X	–	–	–	–	–	–	–
MPLMP2	1.05	–	–	–	–	X	X	X	–	–	–	X	–	–	–	–	–	–	–
MPLMP3	–	–	–	–	–	–	–	–	–	–	–	–	–	–	–	–	–	–	–
MPLMP4	–	–	–	–	–	–	–	–	–	–	–	–	–	–	–	–	–	–	–

(1) MPLM= Mini–Pressurized Logistics Module; C = Ceiling; S = Starboard; F = Floor; P = Port.

(2) Utility control (i.e., valves, flow adjustors, switches, and circuit protection) is provided at each rack location on the module side of the interface unless otherwise noted. Also, cabin air and wireless audio are provided to all locations.

(3) Essential/Auxiliary power will be supplied via either feed.

(4) Implemented via the MIL-STD-1553B bus.

(5) Valve located on payload side of the interface.

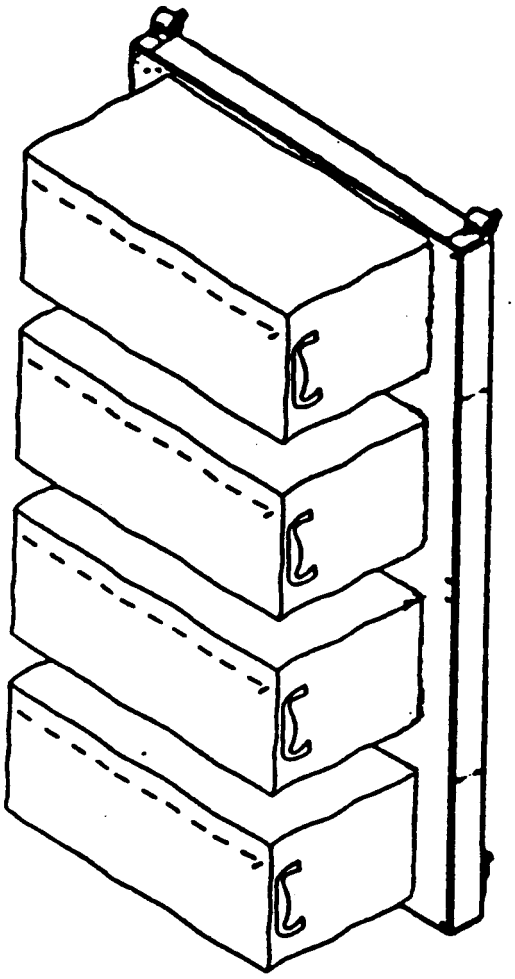

FIGURE 3.2.1.1–1 MPLM AISLE STOWAGE CONTAINER

3.2.1.2 RE–SUPPLY STOWAGE PLATFORM

Each MPLM Flight System rack location is able to support the accommodation of a Re–Supply Stowage Platform (RSP), as shown in Figure 3.2.1.2–1. During the active missions including cargo requiring late access, only the two aft bays can be exploited for the RSP accommodation, since the first and second bays are dedicated to the active cargo. In the event of passive missions, or active flight manifests which do not require late access, two opposite rack locations for each bay can accommodate RSPs.

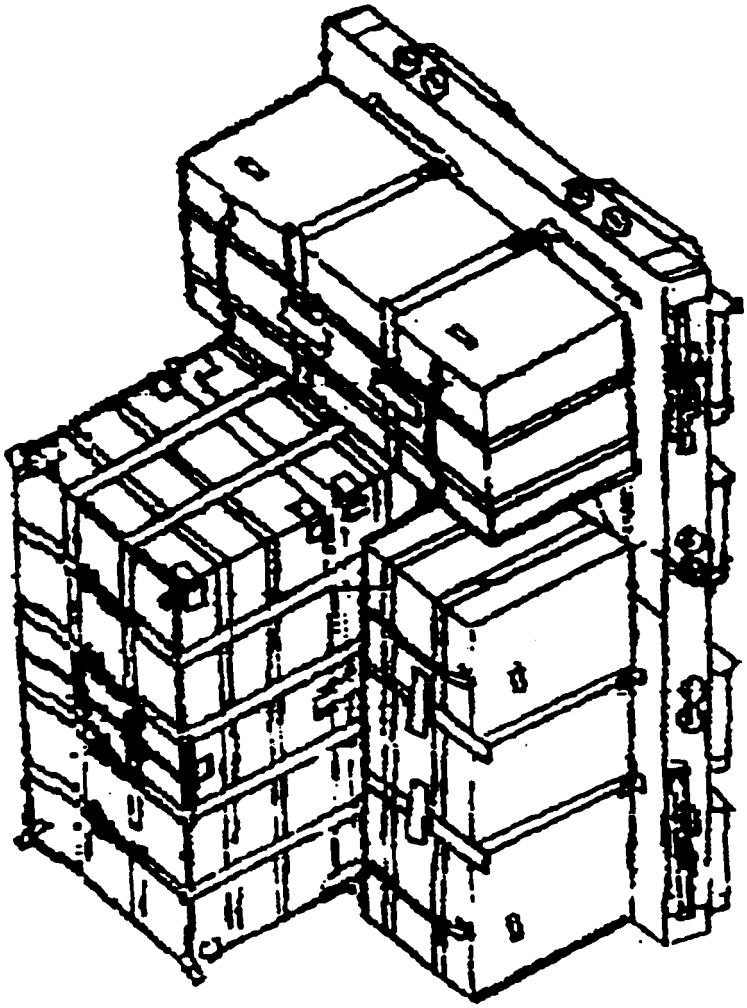

FIGURE 3.2.1.2–1 RE–SUPPLY STOWAGE PLATFORM (RSP)

3.2.1.3 ACTIVE CARGO SUPPORT RESOURCES

Each of the active rack locations is provided with a Utility Interface Panel (UIP), which supports the interface connectors for fluid coolant, electrical power, and data transfer to/from the active rack.

3.2.2 SHUTTLE MIDDECK ACCOMMODATIONS

Shuttle middeck area accommodations are intended for late and early access (i.e., prior to and after launch) for biological samples and other time–critical items. Information regarding

transportation in the middeck area can be found in NSTS 07700, Volume XIV, Space Shuttle System Payload Accommodations, and in NSTS 21000–IDD–MDK, Middeck Payloads Interface Definition Document for Middeck Accommodations.

3.2.3 OTHER VEHICLES

(TBD #3)

4.0 SYSTEM DESCRIPTIONS, INTERFACES, AND PAYLOAD ACCOMMODATIONS

This Section provides a description of subsystems, interfaces, and payload accommodations as related to pressurized payloads for transportation and on–orbit modes. Descriptions are included to familiarize users with available accommodations and assist with payload design. Specific payload design requirements are included in the Pressurized Payload Interface Requirements Document (IRD), SSP 57000. Section 4 of the PAH is organized by the types of interfaces a payload may have with the ISS. These sections are Structures and Mechanisms, Microgravity, Electrical, Command and Data Handling (C&DH), Communications and Tracking, Thermal Control, Environments, Vacuum System, Caution and Warning / Fire Protection, Materials and Processes Use and Selection, Human Factors, Stowage, and Safety. In general, this section is written to the payload rack integrator; however, it should be useful to the subrack payload integrator as well. Subrack payload interfaces are defined by the rack integrator.

4.1 STRUCTURAL/MECHANICAL, AND MICROGRAVITY AND STOWAGE INTERFACE REQUIREMENTS

4.1.1 STRUCTURAL/MECHANICAL

The basic pressurized module structure consists of a cylinder section, debris shield, end–cones, and standoffs. Four sets of standoffs inside the pressure shell provide structural support and utility routing to the payload racks. The ISPR is designated as the standard payload equipment interface to the ISS for pressurized payloads. Each ISPR location provides standard mechanical attachments and a standoff mounted UIP for access to ISS provided utilities as shown in Figure 4.1.1–1, International Payload Rack–to–Module Interfaces. The module specific UIPs are shown in Figure 4.1.1–2, NASDA Life Sciences Rack UIP Connector Locations; Figure 4.1.1–3, NASDA Material Processing Rack UIP Connector Locations; Figure 4.1.1–4, NASA Specific UIP Connector Locations; Figure 4.1.1–5, ESA Specific UIP Connector Locations. Exceptions to this interface plane are the cabin air and the crew fire suppression and maintenance interfaces. All utility interface panel connectors will be oriented such that their master keying is parallel and adjacent to the top edge of the utility interface panel.

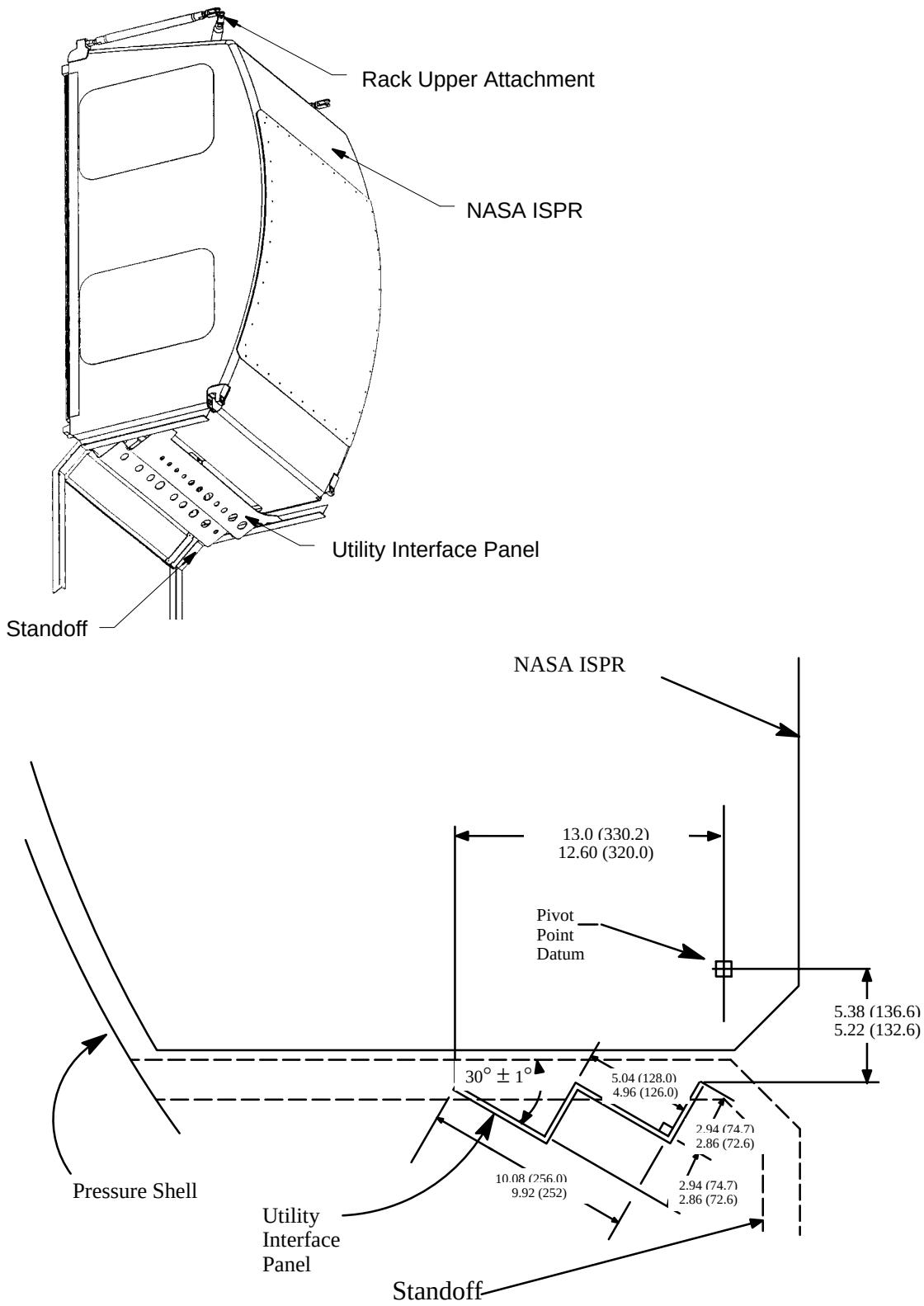

FIGURE 4.1.1–1 INTERNATIONAL PAYLOAD RACK–TO–MODULE INTERFACES

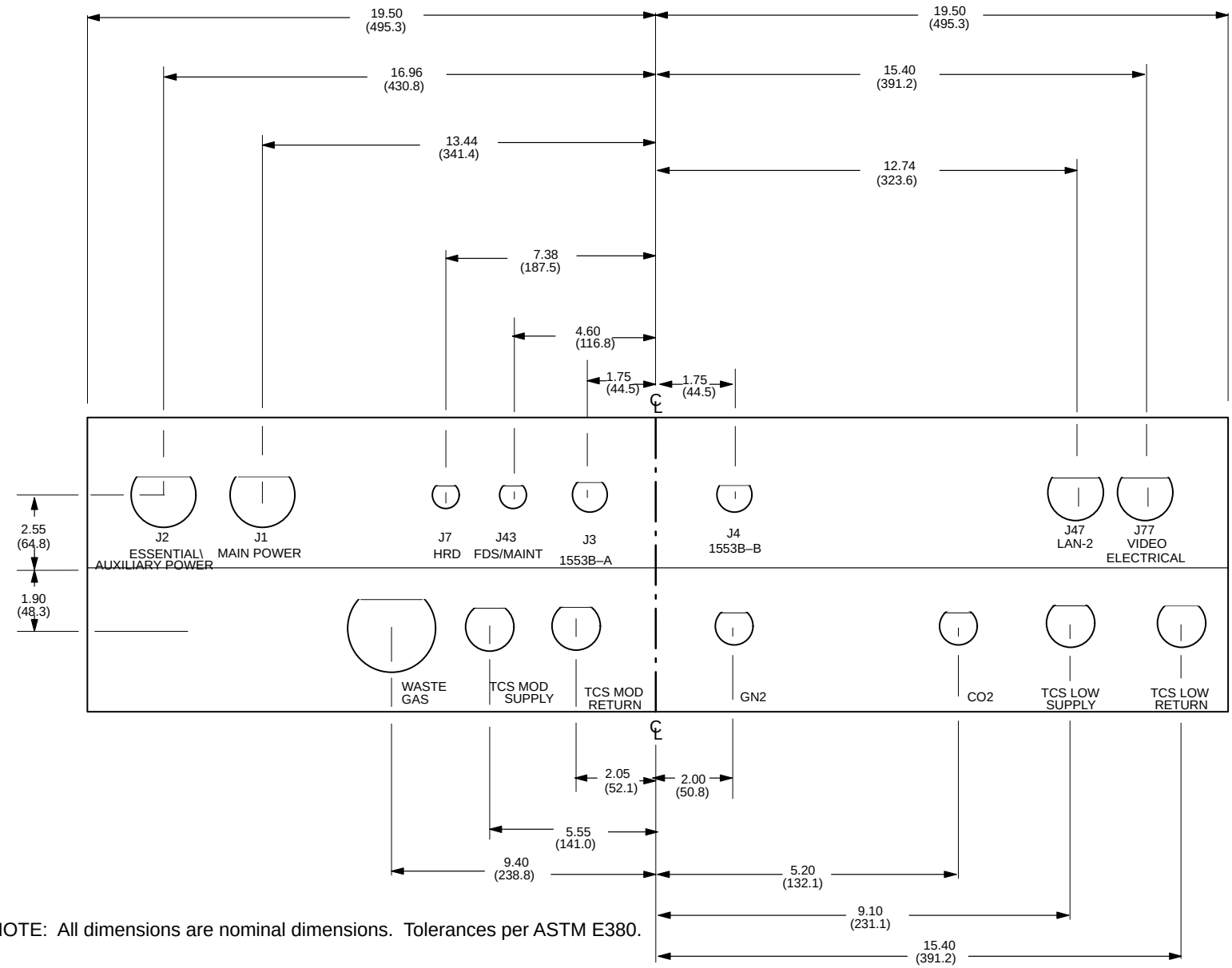

NOTE: All dimensions are nominal dimensions. Tolerances per ASTM E380.

FIGURE 4.1.1–2 NASDA LIFE SCIENCES RACK UIP CONNECTOR LOCATIONS

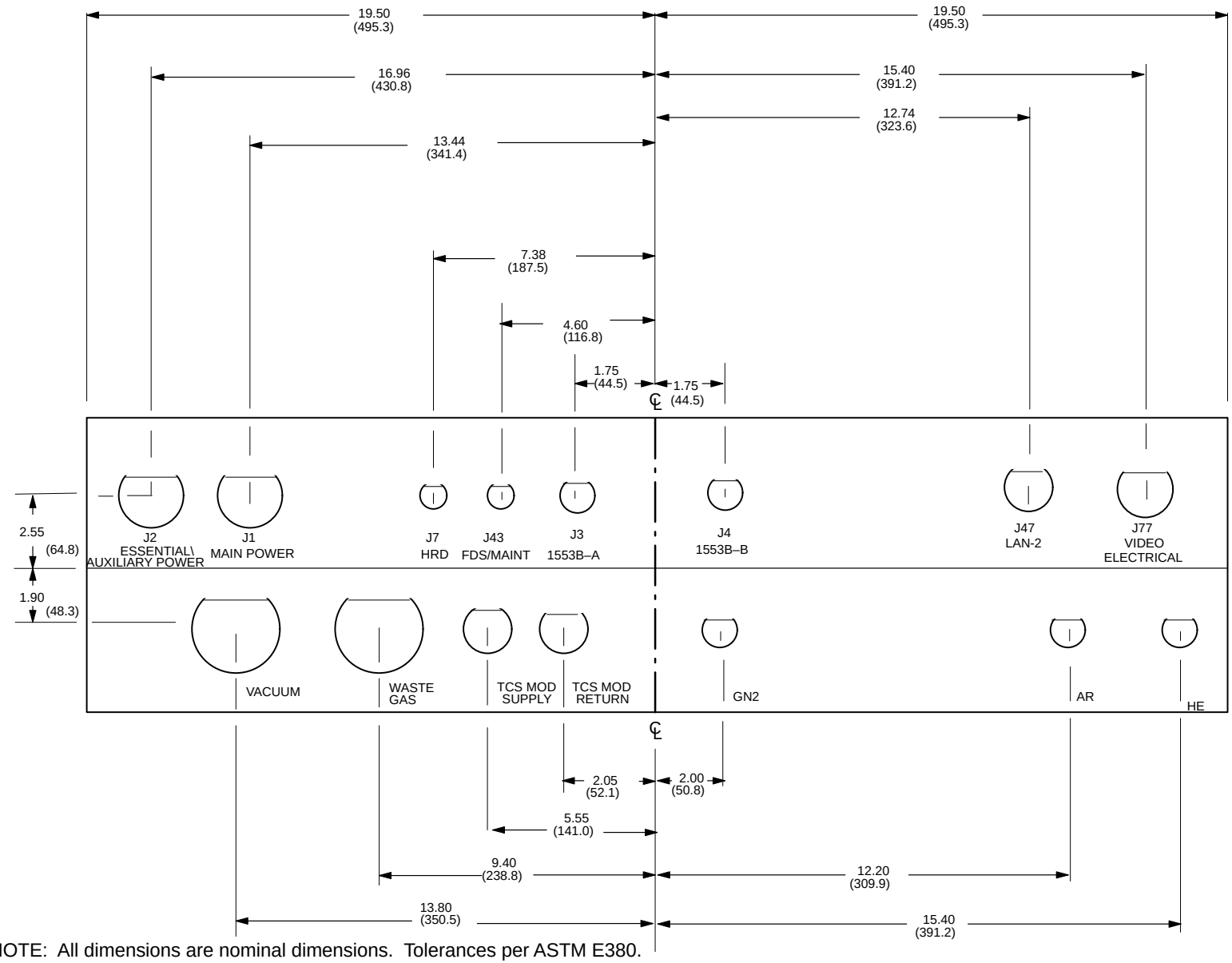

NOTE: All dimensions are nominal dimensions. Tolerances per ASTM E380.

FIGURE 4.1.1–3 NASDA MATERIAL PROCESSING RACK UIP CONNECTOR LOCATIONS

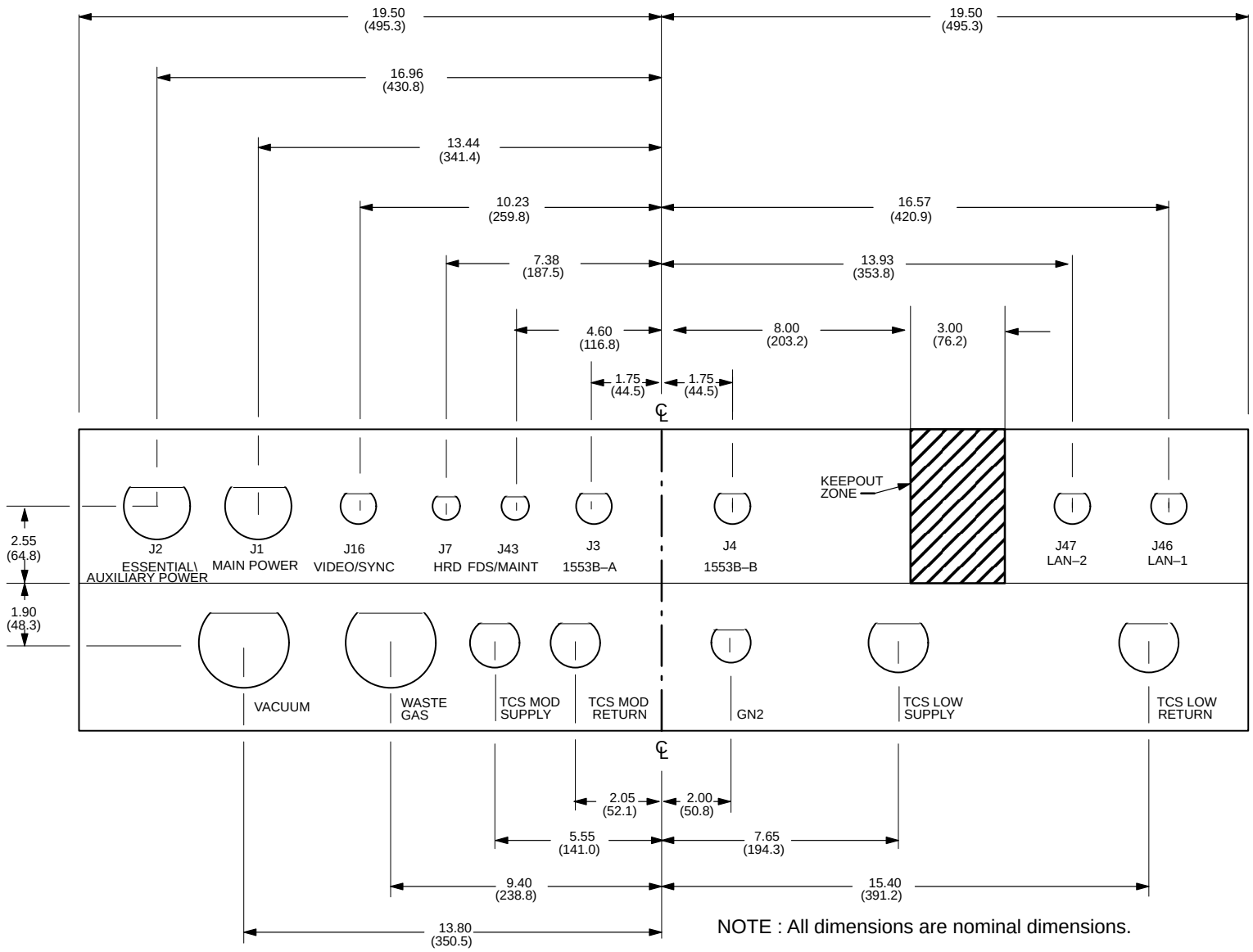

NOTE : All dimensions are nominal dimensions.

FIGURE 4.1.1–4 NASA SPECIFIC PANEL UIP CONNECTOR LOCATIONS

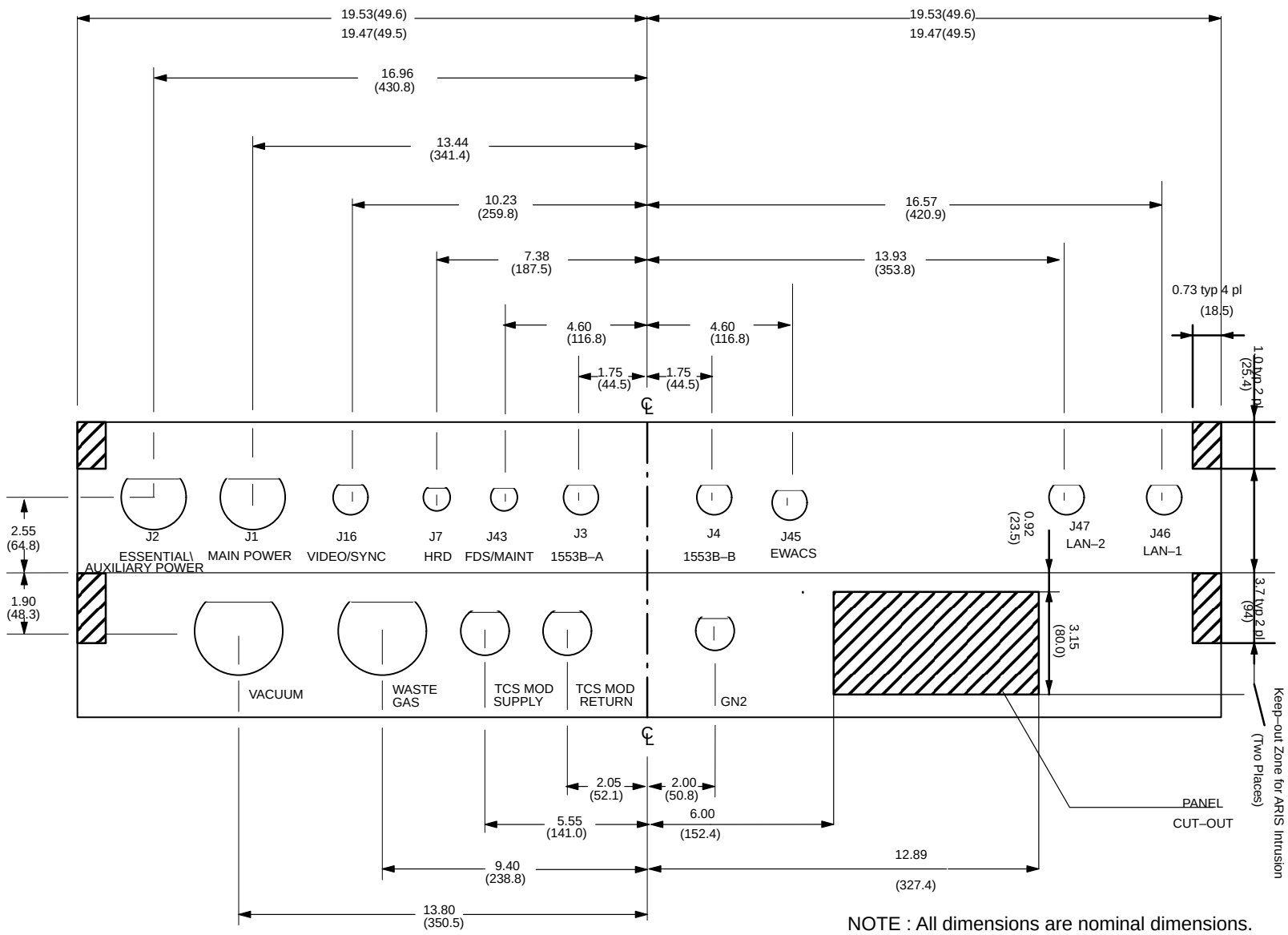

NOTE : All dimensions are nominal dimensions.

FIGURE 4.1.1–5 ESA SPECIFIC PANEL UIP CONNECTOR LOCATIONS

4.1.1.1 GSE INTERFACES

All Integrated racks must interface to the KSC GSE Rack Insertion Device (RID), Teledyne Brown Engineering (TBE) Rack Shipping Containers, and TBE Rack Handling Adapters (RHA). This equipment is only designed to handle racks with a mass of 1773 lbs or less. Racks currently sit on two bases, the SSPF base and the MSFC base, which has a lower profile. The interface locations for the rack to GSE are shown in SSP 41017 part 2, paragraph 3.3.3 GROUND HANDLING ATTACHMENT INTERFACES. The verification of this requirement is satisfied when the integrated rack design drawings show it is compatible to the drawings in SSP 41017. The NASA provided 683–50243–4 ISPR structure is assumed to meet these interfaces, provided that the integrated rack hardware does not exceed the static envelope requirement.

Rack compatibility with the RHA shall be verified by a fit check demonstration. The demonstration shall be considered successful when it is shown that the rack can be successfully connected to the RHA. The NASA provided 683–50243–4ISPR structure is assumed to meet these interfaces, provided that the integrated rack hardware does not exceed the static envelope requirement.

Interface loads are discussed in SSP 41017 Part1, paragraph 3.2.2.4.3 INTERFACE LOADS. Design limit loads are shown in Table 3.2.1.4.3–1 MPLM AND MECHANICAL GROUND SUPPORT EQUIPMENT LOCAL RACK ATTACH POINT DESIGN LIMIT LOADS of SSP 41017 part 1. These limit loads protect the GSE from damage by the integrated rack.

In addition to design loads integrated racks are limited to ground transportation accelerations of 80% of flight accelerations which are defined by SSP 41017 Part 1, paragraph 3.2.1.4.2. This requirement is to ensure that the transportation environment does not use up the life of the rack and it’s components. This requirement is meet by recording transportation loads in the 3 orthogonal rack axes during shipping, and an analysis that shows that these accelerations do not exceed 80% of the flight accelerations.

4.1.1.2 MPLM INTERFACES

All racks must interface with the structural attach points of the MPLM. These attach points are defined in SSP41017 Part 2 paragraph 3.1.1. Accurate attach point ensure the safety of the MPLM and the integrated rack. It also ensures against timely delays during preparation for launch.

Rapid depresseration can cause damage to the integrated rack and it’s components. The MPLM has specified that in an event the racks must be able to with stand a depress rates of 890 Pa/second (7.75 psi/minute) and repress rates of 800 Pa/second (6.96 psi/minute). To verify to this requirement the PD must perform an analysis, which determines the maximum delta pressure from within to outside the integrated rack and shows that the integrated rack maintains positive margins of safety (delta pressure limited to 3.5 kPa (0.5 psi)). For NASA provided 683–50243–4 ISPRs with intact and unblocked pressure relief valves verification may be by inspection of integrated rack design drawings.

The MPLM is designed to withstand forces from the integrated rack, but the integrated rack is limited to producing interface attach point loads less than or equal to those identified by SSP 41017 Part 1, paragraph 3.2.1.4.3, based upon an acceleration environment as defined in SSP 41017 Part 1, paragraph 3.2.1.4.2. Exceeding these loads can cause damage to the MPLM. Verification of this requirement is by an analysis using the referenced acceleration data and calculating the interface attach point loads via Finite Element Modeling (FEM). The analysis shall be considered successful when the FEM is approved by the ISS Program and it calculates attach point loads that do not exceed the MPLM allowable limits. A coupled loads analysis will be conducted by the ISS Program using the FEM provided to ensure that MPLM allowables are not exceeded when coupled loads are taken into account.

4.1.1.2.1 MPLM LATE/EARLY ACCESS REQUIREMENTS

The requirements contained in this section define and control the payloads and associated GSE that require ISS MPLM late or early access. Additional information for this process is provided in SSP 50053, ASI Flight Hardware to Launch and Landing Site ICD; ICD–A–21378, SSP DEAP to ISSP HAS / CHEK GSE Interfaces; ICD–A–21379, ISS Payload / GSE Ground Operations Envelope.

MPLM late/early access payloads, equipment items, samples and associated GSE weight is limited to 250 lbs per individual transfer. This requirement is satisfied when the weight does not exceed 250 lbs.

Late Access is defined as cargo integration during pre–launch activities with the orbiter in the vertical position. Late Access for stowage of conditioned samples inside the MPLM is completed by L–88 hours, and is followed by MPLM late access GSE removal. Payloads, equipment items, samples and associated GSE requiring MPLM late access are loaded through the hatch. The PD must adhere to the envelope defined in SSP 57000, Figure 3.1.1.2.1.1–1.

Payloads, equipment items, samples and associated GSE requiring MPLM late access are loaded using the late access hoist hook and or the late access monorail hook hoist. The PD developer must design to meet these interface requirements. The late access hoist hook interface is identified in SSP 57000, Figure 3.1.1.2.1.1–2. The late access monorail hook hoist interface is identified in SSP 57000, Figure 3.1.1.2.1.1–3. These requirements are satisfied by inspection.

Early Access is defined as cargo deintegration during post–landing activities with the orbiter in the horizontal position. Payload activities will begin approximately 96 hours after landing / return (R+96).

Payloads, equipment items, samples and associated GSE requiring MPLM early are loaded through the orbiter docking system (ODS) and/or the Dryden Early Access Platform (DEAP) monorail interface. PD’s must adhere to the orbiter docking system (ODS) envelope defined in SSP 57000 Figure 3.1.1.2.1.2–1, and/or the Dryden Early Access Platform (DEAP) monorail interface defined in SSP 57000 Figure 3.1.1.2.1.2–2. These requirements are satisfied by inspection.

4.1.1.3 LOADS REQUIREMENTS

Integrated racks will experience many different loading conditions among them are; launch, normal landing, emergency landing or contingency landing, transportation, on–orbit, and crew induced loads. The MPLM launch and landing loading conditions are based upon the acceleration environment defined in SSP 41017 Part 1, paragraph 3.2.1.4.2. Loads should be applied consistent with the rack coordinate system defined in SSP 41017, Part 2, paragraph 3.1.3. With these loads the integrated rack must show through analysis via an approved ISS program Finite Element Modeling (FEM) that positive margins of safety are obtained in the launch and landing configuration, based upon the rack structure allowables identified in SSP 57007 Rack Integrator's Handbook.

Many integrated racks have different configurations for shipping, ground handling, launch and landing and on–orbit. While it is true that launch and landing primarily envelop 0.2 G on orbit loads, the configuration are usually different. It is important that PD's show that the on–orbit configuration has positive margins for 0.2 G loads acting in any direction. Configurations or parts of configurations that are the same as launch and landing can analytically show that the loads are enveloped by launch and landing analysis. But parts of the configuration that are different (i.e. new connections) must show positive margins for 0.2 G's on–orbit loads.

Integrated racks that have Rack Utility Panel (RUP) umbilicals must restrain these umbilicals during launch and landing to prevent damage to loose connectors from loads and vibration.

Crew induced loads are another environment that an integrated rack can experience. The most concern is usually the 125 lb kick load requirement that is imposed over a 4 inch by 4 inch area acting in any direction. This load is for rack front panels and any other normally exposed equipment of the integrated rack. If the area is smaller than 4inch by 4 inch it is distributed over the actual area.

Ascent random vibration environment in the MPLM is an important environment for components mounted to ISPR posts. This environment is defined in SSP 57000 Table 3.1.1.3–2, "Random Vibration Criteria for ISPR Post–Mounted Equipment Weighing 100 Pounds or Less in the MPLM", or SSP 57000 Table 3.1.1.3–3, "Random Vibration Criteria for ISPR Post–Mounted Equipment Weighing More Than 100 Pounds in the MPLM."

SSP 52005 paragraphs 4.1.2 and 4.1.5 provides guidelines that this analysis must follow.

For early design, the acceleration environment defined in SSP 57000 Table 3.1.1.3–4, "Payload Mounted Equipment Load Factors (Equipment Frequency 35 Hz)" will be used. These load factors will be superseded by load factors obtained through ISS–performed Coupled Loads Analysis as described in SSP 52005. The PD must perform an analysis to show that the components mounted to the ISPR rack maintain positive margins of safety after exposure to the design load factors for launch and landing environments as defined in SSP 57000 paragraph 3.1.1.3. SSP 52005 paragraphs 4.1.2 and 4.1.3 provides guidelines that this analysis must follow.

4.1.1.4 RACK REQUIREMENTS

To protect the integrated rack, other integrated racks, the MPLM, and the ISS restrictions must be placed on the racks. An integrated must be less than 1773 lbs for launch and landing in the MPLM and for ground and on–orbit operations. The integrated rack mass requirement is verified by a demonstration involving measuring the weight of the integrated rack on the ground prior to launch and an analysis that accounts for attached GSE and any changes during on–orbit operations prior to return of the payload. It is also levied that the measured to an accuracy of 5 lbs and is less than the specified maximum weight.

Integrated racks may experience depresseration and repressurization while on–orbit. Integrated racks must show through an analysis that the integrated rack will maintain positive margins of safety for the on–orbit depress/repress rates identified in SSP 41002 paragraph 3.1.7.2.1. Integrated racks must show that the integrated rack maintains positive margins of safety (delta pressure limited to 3.5 kPa (0.5 psi)). Verification shall be considered successful when the analysis shows that 3.5 kPa (0.5 psi) delta pressure is not exceeded.

Integrated racks are not allowed to have the same modal frequency of the MPLM. The integrated rack and kneebrace must have a modal frequency in accordance with SSP 52005 paragraph 5.7, second paragraph for launch and landing based on rigidly mounting the integrated rack in the launch configuration. The PD must perform an analysis using the guidelines provided in SSP 52005 appendix C.1.2.2.

Equipment mounted directly to the rack should have a modal frequency goal of 35 Hz for launch and landing based on rigidly mounting the component at the component to rack interface. Although no verification is necessary for this requirement.

Integrated racks must comply with the keepout zone for rack pivot mechanism as defined in SSP 41017 Part 1, paragraph 3.2.1.1.2. To verify to this requirement an inspection of the umbilical routing drawing is preformed to ensure that the keepout zone is provided. The verification that an analysis showing that the umbilicals can be moved out of the envelope without exceeding any umbilical bend radii will also satisfy the requirement.

Integrated racks that will be installed in the U.S. Lab Nadir Window location must accommodate the modified ISPR static envelope defined in SSP 57001, Figure 3.1.1.4–1. The verification for this requirement is considered successful when the analysis indicates a positive clearance.

Integrated racks must be capable of rotating a minimum of 80 degrees about the pivot point for on–orbit installation, removal, and maintenance functions.

The PD must perform an analysis using integrated rack and module data to evaluate the maximum rotation angle.

Integrated racks and rack equipment that have PFE access ports must maintain positive margins of safety when exposed to the PFE discharge rate given in SSP 57000, Figure 3.1.1.4–1. PD's must perform an analysis which determines the maximum delta pressure from within to outside the integrated rack during PFE discharge and shows that the integrated rack maintains positive

margins of safety (delta pressure limited to 3.5 kPa (0.5 psi) and rack equipment maintains positive margins of safety.

Integrated racks requiring rotation must use the rack and crew restraints identified in SSP 30257:004 (for example, the 14 inch fixed length tether and the 71 inch adjustable length tether) to secure the rack in these rotated positions for payload operations and maintenance. The verification is considered successful when the analysis shows that the ISS provided hardware can secure the rack in the required rotation positions.

For the Crew's safety integrated racks are not allowed to have a pressure relief device on the front of the rack. This requirement is verified by inspection.

4.1.1.4.1 LAB WINDOW RACK LOCATION REQUIREMENTS

When the lab window scratch pane is removed, radiation shielding as specified in SSP 57000 section 3.9.3.4 is required, and a protective cover shall be provided that prevents contact with the lab window surface.

The Integrated racks at the lab window location must accommodate a keep–out zone as specified in SSP 57001, Figure 3.1.1.4–1.

Integrated racks at the lab window location, that are open on the back (window) side of the rack, shall provide a barrier from the Lab pressure wall to the integrated rack to isolate the rack volume from the stand–offs and area behind the racks.

4.2 MICROGRAVITY

This section describes the microgravity environment intended for payloads on ISS during microgravity periods and defines the requirements to be placed upon payloads to assist in meeting this environment.

4.2.1 MICROGRAVITY ENVIRONMENT FOR PAYLOADS

The ISS is to provide a microgravity environment interspersed with maintenance and other operations. The plan for conducting operations is based upon rendezvous and reboost periods, roughly scheduled at 90 day increments as shown in Figure 4.2.1–1, Timeline of Events for Assessment of Microgravity Performances. After a rendezvous and resupply at relatively low Earth orbit, the ISS will reboost to a higher orbit and coast, subject to the low orbit exoatmospheric drag conditions which prevail. The coast period nominally consists of two 30 day microgravity periods, separated by a period of maintenance. Microgravity periods are to provide a microgravity environment to a minimum of 50% of payload racks for at least 180 days per year including at least two continuous 30 day periods per year. Quasi–steady, vibratory and transient requirements are to be met during the microgravity periods. These microgravity periods also form a basis for all payload operations since power and thermal capabilities are defined for payloads only during these time intervals.

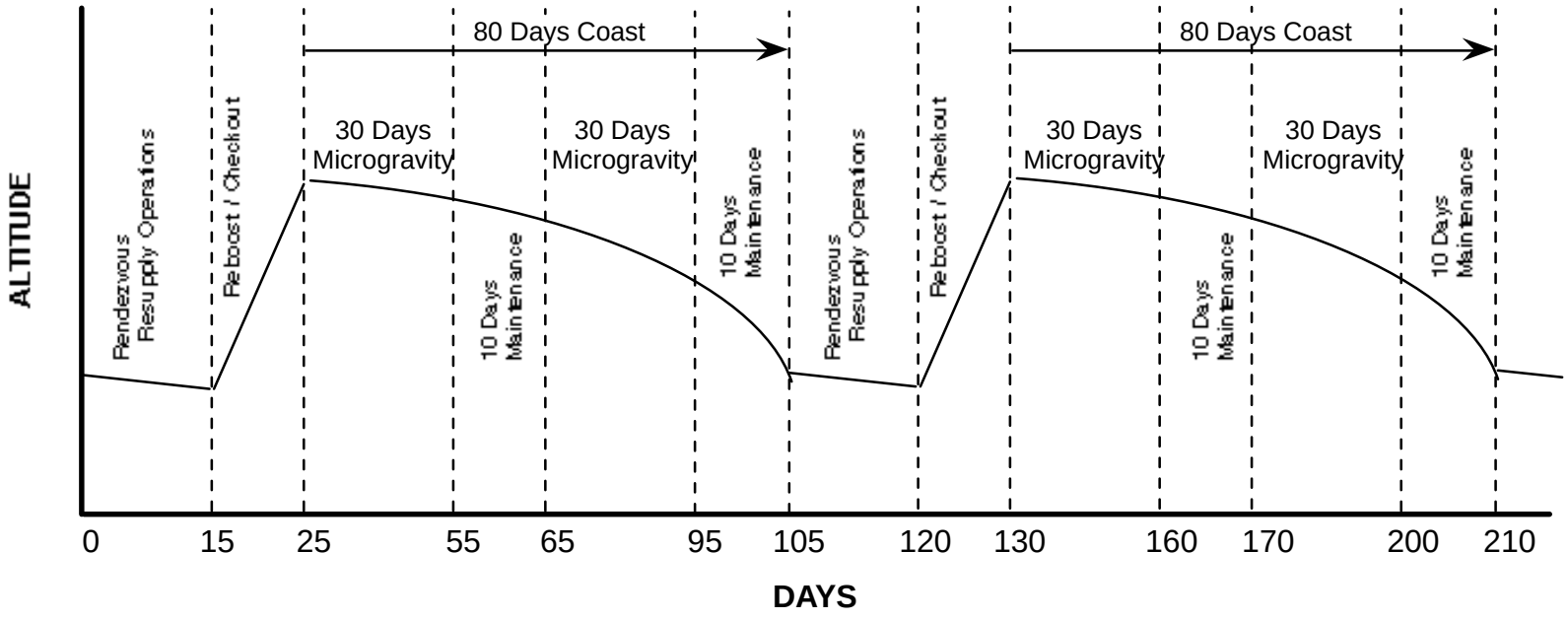

FIGURE 4.2.1–1 TIMELINE OF EVENTS FOR ASSESSMENT OF MICROGRAVITY PERFORMANCES

4.2.1.1 QUASI–STEADY ACCELERATION ENVIRONMENT

The quasi–steady requirement for ISS is to provide microgravity acceleration levels less than 1 micro–g for frequencies below 0.01 Hz for the volume and durations specified in paragraph 4.2.1. The perpendicular component to the primary quasi–steady acceleration vector is not to vary more than 10% of the magnitude of the primary component. The first of the two periods over each coast period, shown in Figure 4.2.1.1–1, Quasi–Steady State Microgravity Contours Due to Gravity Gradient and Once–Per–Orbit Rotation Accelerations, will produce reduced quasi–steady acceleration due to the reduced drag experienced at higher Earth orbit than will normally be possible during the second period. The atmospheric drag component is time varying per orbit also, as shown in Figure 4.2.1.1–2, Drag Acceleration Profile Over One Orbit for Assembly Complete Configuration. The x direction component will vary primarily due to ISS cross sectional area change and due to atmospheric density change. The cross sectional area is largely influenced by the solar array profile and is greatest near the terminator when the sun appears over the forward horizon and when the sun disappears over the aft horizon. The orbital atmospheric density changes with the local time of day over the Earth's surface. This density change is due to the increased presence of gas molecules, largely following parabolic trajectories, beginning and ending in the heated denser atmosphere below. Solar heating increases the temperature of the upper atmosphere resulting in a larger peak occurring near the 2:00 PM local time position of the earth on each orbit.

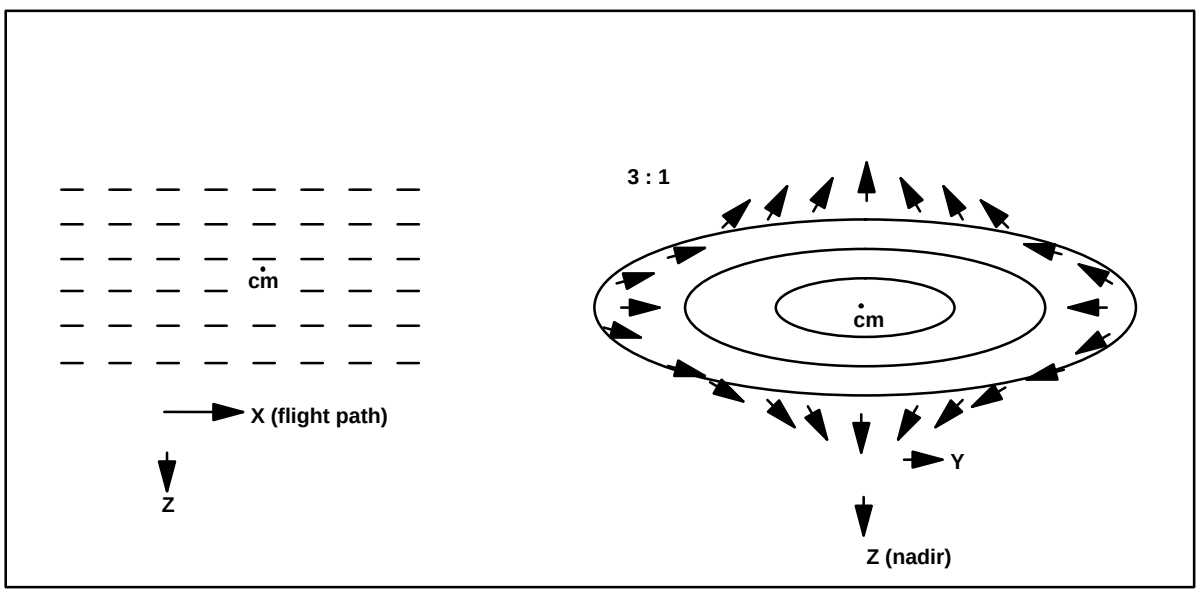

FIGURE 4.2.1.1–1 QUASI–STEADY STATE MICROGRAVITY CONTOURS DUE TO GRAVITY GRADIENT AND ONCE–PER–ORBIT ROTATION ACCELERATIONS

Smaller changes in y and z direction accelerations will accompany changes in x acceleration. The primary contributor to these off–axis accelerations is sine of Torque Equilibrium Angle (TEA) multiplied by the drag acceleration magnitude. The TEA angle may exceed 10 degrees due to the need to maintain an average aerodynamic torque on the ISS near zero. Otherwise, the angular momentum countering effects of the control moment gyros would eventually be exceeded. Atmospheric drag will also affect off–axis acceleration due to deflecting of molecules caused by the slanted solar arrays, which create an effect analogous to lift. The TEA change is minimized over each orbit by maintaining an average torque value near zero. The CMGs counter the short term torque changes to provide a near constant quasi–steady acceleration environment. Occasionally however, the torque equilibrium angle will require adjustment due to changing atmospheric or station mass properties conditions, resulting in short term angular accelerations and longer term shifts in the A * sin(TEA) change.

Large solar cycle changes are superimposed on these orbital variations, generally following the standard 11 year solar activity cycle, but also varying somewhat unpredictably due to short–term flare ups associated with increased sun spot activity. Increased solar activity results in generally increased drag; however, due to station keeping concerns, the ISS will be moved to a higher orbit commensurate with the solar cycle to reduce drag and extend the time reserve in–orbit. Consequently, the effects of solar cycle on payload drag are minimized.

The approximate 90 day cycle between planned reboost periods results in the largest atmospheric drag change. Following reboost, the ISS will be in its highest orbit, resulting in the minimum drag, lowest x acceleration period. The peak orbital drag during these periods should be on the order of 0.1 to 0.2 micro–g compared with the greater than 1 micro–g drag which will occur prior to reboost. The period of re–boost will present the largest accelerations, but this non–microgravity period will be relatively brief.

Gravity gradient produces another quasi–steady vibration contribution as shown in Figure 4.2.1.1–1 for the Local Vertical. This environment applies to the Local Vertical, Local Horizontal (LVLH) fixed attitude experienced at assembly complete and also during approximately half of the time prior to assembly complete. This contour profile will exist about the velocity vector line passing through the center of mass of ISS and extending indefinitely fore and aft. However, an X axis Perpendicular to Orbital Plane (XPOP) ISS attitude will frequently be experienced prior to assembly complete. This will occur whenever the solar angle exceeds approximately 35 degrees from the orbital plane, and will produce a greatly different and dynamic gravity gradient contribution. The structural X axis will experience the same out–of–orbit plane gradient previously experienced in structural Y. The structural Y and Z axis will experience changing gravity gradient components reaching a maximum gradient two thirds of that experienced in the Z direction. One micro–g quasi–steady environment will not be provided during the XPOP attitude to most payload locations and the perpendicular component at all payload locations will vary with time. Consequently, the requirement to minimize the perpendicular component requirement of quasi–steady acceleration will not be attempted during XPOP attitude.

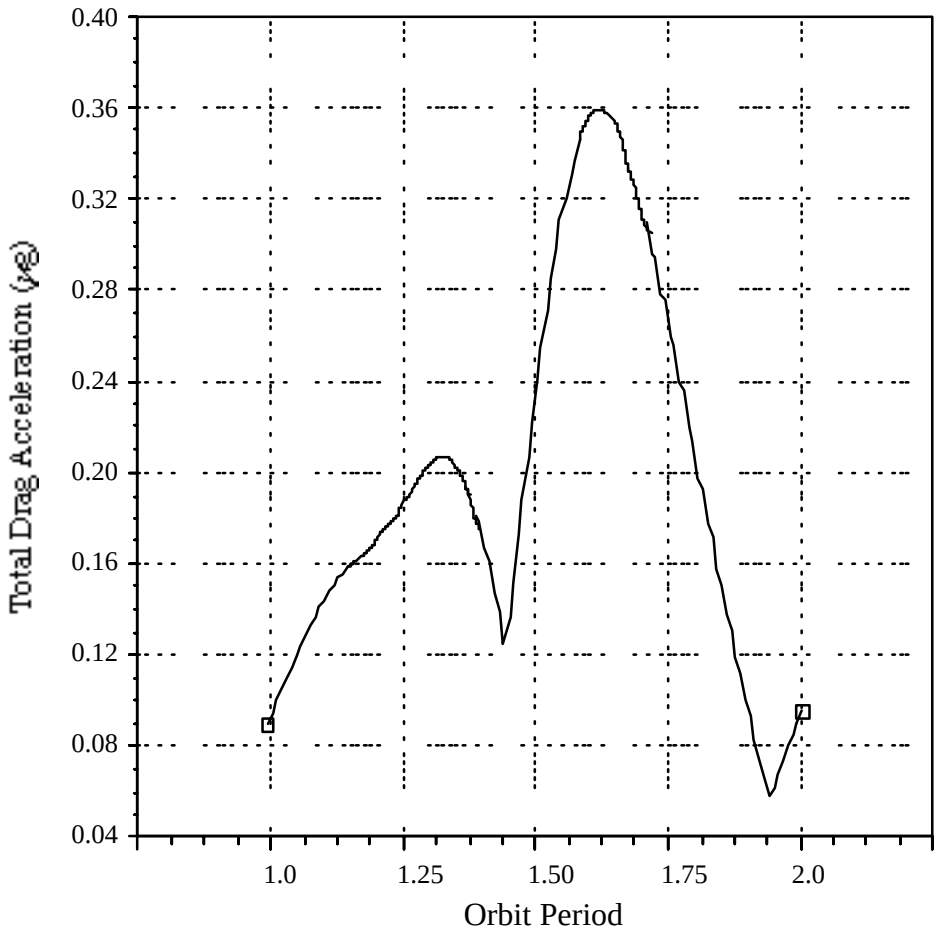

FIGURE 4.2.1.1–2 DRAG ACCELERATION PROFILE OVER ONE ORBIT FOR ASSEMBLY COMPLETE CONFIGURATION

4.2.1.2 VIBRATORY ACCELERATION ENVIRONMENT

ISS will provide a vibration microgravity environment during microgravity periods not exceeding the Root Mean Square (RMS) levels shown in Figure 4.2.1.2–1, Maximum Microgravity Vibration Environment during Microgravity Periods, for any one–third octave band when time averaged over any 200 second period.

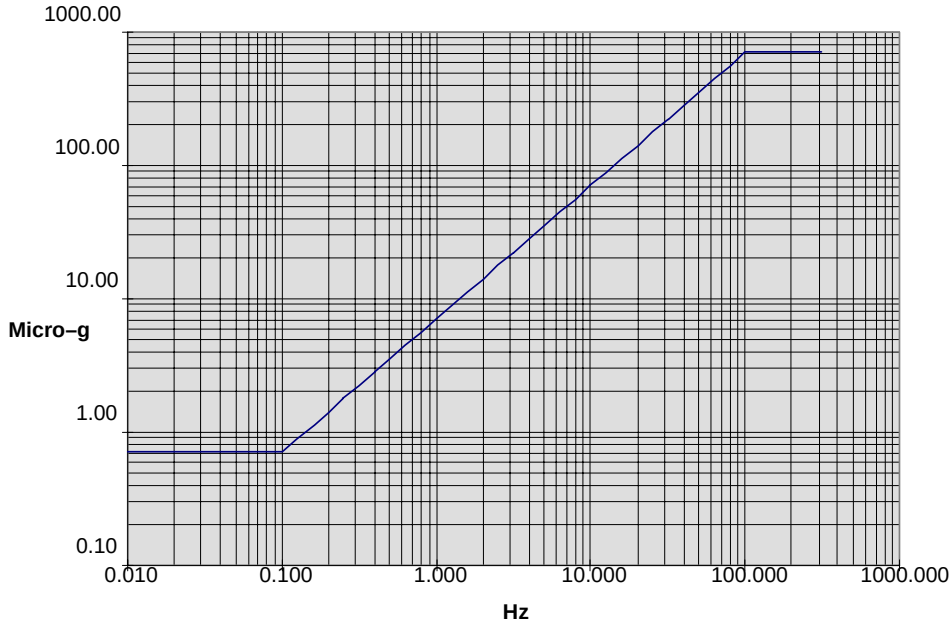

FIGURE 4.2.1.2–1 MAXIMUM MICROGRAVITY VIBRATION ENVIRONMENT DURING MICROGRAVITY PERIODS

4.2.1.3 TRANSIENT ACCELERATION ENVIRONMENT

During microgravity periods, transient disturbances are not to exceed an integrated 10 micro–g second amplitude–time product over any 10 second interval, nor exceed a peak amplitude of 500 micro–g for any duration.

4.2.1.4 ARIS VIBRATION AND TRANSIENT ENVIRONMENT CAPABILITY

Stringent payload vibration microgravity requirements may be achieved through the use of ARIS. The ARIS provides attenuation of vibration for off–board frequencies above 0.01 Hz according to the design concept curve shown in Figure 4.2.1.4–1, ISS System Combined Vibratory Acceleration Limits (Without Payloads). The ARIS transfer function may vary dependent upon the nature of the rack external and payload generated vibration environment and the specific needs of rack users.

The ARIS support system occupies approximately 15% of the rack volume but otherwise provides the same payload capabilities as non–ARIS racks. The ARIS system essentially floats the interior volume of the rack frame for frequencies above a few Hz and counters large displacement from the center position based upon information provided by an array of accelerometers and optical sensors. These accelerometers sense accelerations passed through the soft interface mechanisms and provide a control signal to actuators, which counter the outside disturbances.

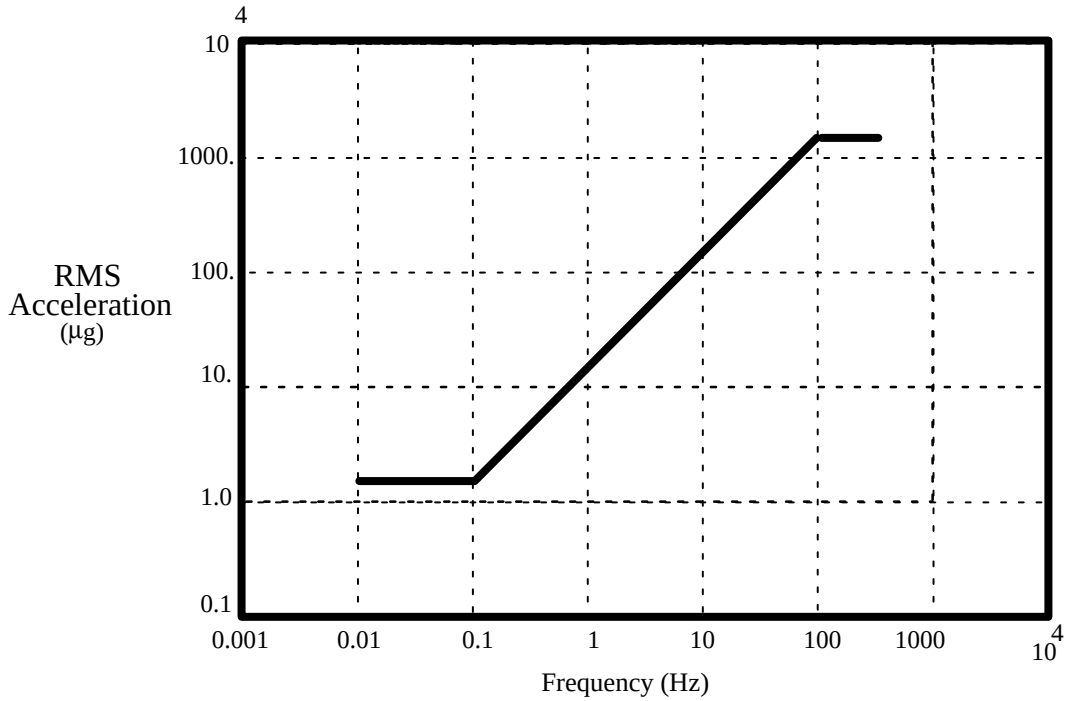

For 0.01 ≤f ≤0.1 Hz: a≤1.6 μg

For 0.1 <f ≤100Hz: a≤f× 16 μg

For 100<f ≤300 Hz: a≤1600 μg

where: f=frequency

a=RMS acceleration

FIGURE 4.2.1.4–1 ISS SYSTEM COMBINED VIBRATORY ACCELERATION LIMITS (WITHOUT PAYLOADS)

4.2.1.5 NON ARIS VIBRATION AND TRANSIENT ENVIRONMENT

The Non–Isolated Rack Vibration Assessment (NIRA) is an estimate of the worst–case vibration environment that may be experienced by non–ARIS rack. The version of this NIRA effective March, 2002 is shown in Figure 4.2.1.5–1.

The NIRA curve is revised periodically and reflects the summation of worst case disturbances which may occur during microgravity periods at worst case locations. Efforts are underway to reduce the amplitude of the peak disturbances such as crew exercise equipment, the source of the 3 Hz peak and rack–to–rack disturbances which are thought to dominate the frequency range between 7 and 15 Hz. As such, the NIRA curve should be a high estimate for the microgravity environment for any given payload at any given time. However, the data base from which NIRA is derived is not yet complete and actual measurements of flight hardware in flight configuration

have only begun. The inputs of international partners are required, some of which are relatively early in their development. Also, the nature of vibration and transient response for ground measured structures may change when removed from normal earth gravity. Consequently, the ultimate vibration experienced by non–isolated racks is not likely to be known until the assembly of ISS is complete.

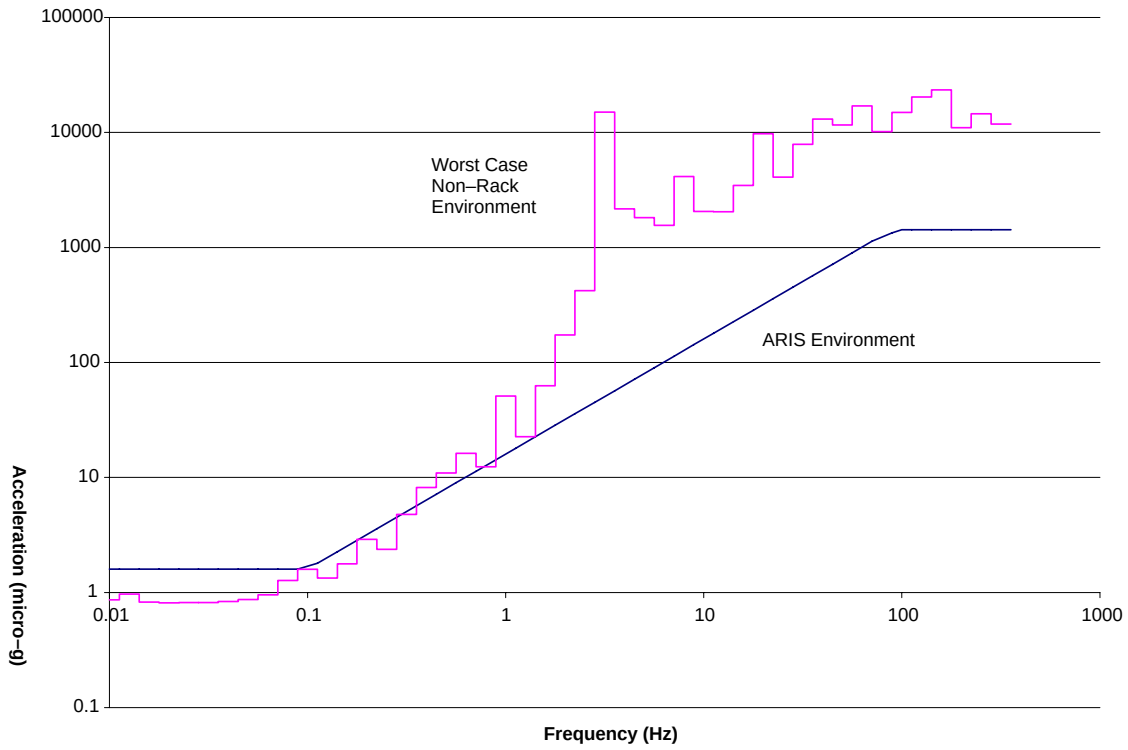

FIGURE 4.2.1.5–1 NON–ISOLATED RACK VIBRATION ASSESSMENT (MICRO–G VS HZ)

4.2.1.6 ISS MICROGRAVITY ENVIRONMENT MEASUREMENTS

ISS acceleration environment measurements are made for approved payloads by the Principal Investigator Microgravity Services (PIMS). Two accelerometer systems are typically used. The Space Acceleration Measurement System (SAMS) can be mounted within or external to racks to measure the environment between 0.01 Hz and 300 Hz. The Microgravity Acceleration Measurement System (MAMS) partially overlaps this region, but principally covers the lower frequency, quasi–steady range, below 0.01 Hz. Quasi–steady acceleration is measured only at one USL rack location, but with the assistance of ISS dynamics provided by the ISS Guidance and Navigation System, the quasi–steady microgravity conditions can be predicted at other locations in ISS. Selected real time data is supplied by PIMS over the Web and reports by increment are posted on the Web for PI use at http://pims.grc.nasa.gov/html/ISS_Reports.html

4.2.2 MICROGRAVITY REQUIREMENTS FOR PAYLOADS

Microgravity requirements placed upon payloads are a suballocation of the total environment allowed on ISS. This translates to an allocation to all payloads of approximately one–sixth of the total allocation, in a Root Sum Square (RSS) sense. This must be further suballocated based upon the number of active payloads at any given time. The same quasi–steady limit and transient limit are given to attached payloads and pressurized payloads. Vibration requirements differ because of differences in proximity and ISS dynamics.

4.2.2.1 QUASI–STEADY

Payloads must limit forces which influence the ISS quasi–steady environment to an average magnitude less than 0.01 micro–g within any 1000 second period along any ISS coordinate system vector. This is a derived requirement estimate based upon extrapolation of the transient 10 micro–g second requirement to a time interval consistent with the 0.01 micro–g limit. Although 0.01 micro–g is a low value, it would require a substantial momentum producing payload to reach this value, which can normally be achieved only by continuous venting at levels which exceed the allowed rates for the vacuum/exhaust gas waste system. Movement of mechanisms within racks are unlikely to produce momentum changes approaching this limit.

4.2.2.2 VIBRATORY REQUIREMENTS

The vibratory requirements for pressurized payloads and attached payloads have the same objective, but differ as to degree and method of verification. Payloads must meet these vibratory requirements if they wish to operate during the microgravity periods where ISS resources are most available for payloads.

4.2.2.2.1 PRESSURIZED PAYLOADS VIBRATORY REQUIREMENTS

Slightly different requirements are imposed on ARIS and non–ARIS payloads due to interface differences, but the objective of requirements for each is primarily to protect other ARIS racks. No requirements are imposed to protect sub–rack payloads from other sub–rack payloads. Such requirements are the responsibility of the rack integrator.

Non–ARIS rack vibratory requirements may be met by either of three methods. One method requires the payload to be modeled or tested for interface force against a rigid interface. The other method requires that the payload model the rack in a PEI provided element model and verify that ARIS environment acceleration limits are met. The first method is simpler to apply, but may be more difficult to pass. A third method is available for very quiet payloads that permits application of source disturbance measurements to shortcut other modeling and test. If measured source disturbance forces are 100 times less than the rack interface force limits used for the first method above then no additional modeling or test is required.

4.2.2.2.2 ATTACHED PAYLOADS VIBRATORY REQUIREMENTS

Attached payloads may be verified by modeling or test against a massive rigid interface. SSP 57003 specifies transfer functions that are to be applied to the resulting interface forces for six degrees of freedom to predict accelerations at ARIS racks. The RSS is taken of the resulting ARIS location accelerations and compared with the limits specified in SSP 57003.

4.2.2.3 TRANSIENT REQUIREMENTS

A. Payloads must limit force over any ten second period, when applied to a 455,000 kg (1 million pounds) ISS, to result in an ISS impulse of no greater than 10 micro–g seconds x ISS mass (payload impulse less than 44.6 N s or 10 lb s).

B. Payloads must limit their peak acceleration contribution to a 455,000 kg (1 million pounds) ISS to less than 1000 micro–g for any duration.

4.2.2.4 ARIS MICROGRAVITY

4.2.2.4.1 ARIS RACK VIBRATORY REQUIREMENT

In addition to meeting the requirements specified in paragraphs 4.2.2.1, 4.2.2.2, and 4.2.2.3, integrated ARIS racks must meet the vibratory disturbance requirements in accordance with SSP 57005 and methods described in the Generic Payload Microgravity Control Plan.

A. Integrated ARIS racks must limit vibroacoustic disturbances according to the requirements of the rack integrator, as necessary to allow ARIS to function within a rack microgravity allocation.

B. During active ARIS microgravity isolation modes, integrated ARIS racks must limit vibroacoustic disturbances so that the ARIS control system function within their operational range. Excessive on–board disturbances can cause saturation of the accelerometers, resulting in erratic ARIS performance and the generation of excessive transients or vibration to nearby racks. A procedure for ensuring adequate ARIS control system performance is given in the Generic Payload Microgravity Control Plan.

4.2.2.4.2 ARIS TRANSIENT REQUIREMENT

ARIS racks must meet the transient disturbance requirements in accordance with the Generic Payload Microgravity Control Plan. Further information may be provided in future updates of SSP 57005, ARIS To Payload ICD during microgravity isolation.

4.2.3 GUIDELINES FOR PAYLOAD DEVELOPMENT

The microgravity requirements for ISS are unique and more stringent than those considered for other manned spacecraft in the past. This does not mean that equipment used in the past will not pass microgravity requirements. For instance, Space Shuttle was developed without microgravity requirements. Yet when the crew is less active, thrusters are disabled and the ku–band antenna system is disabled, the Orbiter environment meets the ISS requirement for on–board ARIS.

The area where ISS requirements are likely to be more stringent is in the lower frequency range below 15 Hz. This is due to the presence of low frequency modes on ISS that are not present on the relatively rigid Orbiter. Particular care is necessary for hardware that operates in the frequency range from 0.1 Hz to 10 Hz. Fortunately, forces generated in this range are frequently the result of noticeable mass motion and can generally be estimated by analysis..

If payload developers are not successful in providing microgravity verification, operation may be restricted to the non–microgravity periods of ISS operations. Based upon the 180 day per year minimum microgravity requirement, this would imply that the remaining portion of each year would be available for non–microgravity payloads. This may be so; however, the ISS is also under no obligation to provide significant power, heat rejection or crew time to payloads during non–microgravity periods, which may be reserved largely for upgrade, maintenance and human factors related activities.

4.2.3.1 QUASI–STEADY AND TRANSIENT REQUIREMENTS

The rack integrator should show that for any period greater than 10 seconds that an average force greater than 0.02 pounds is not sustained along any axis. For example, it is sufficient to show that a translating 100 lbm can not move a distance greater than 3.9 inches from rest in 10 seconds while also showing that the linear acceleration assumption is valid.

For payloads using the vacuum and waste gas system, it should not be necessary to provide analysis if the vacuum and waste gas system limits are met and blowdown periods do not exceed a frequency of once every 1000 seconds.

Devices which have large angular momentum, such as large centrifuges, may introduce a precessional torque upon ISS which modifies the ISS torque equilibrium conditions, requiring slight changes in attitude. Such attitude changes may affect the quasi–steady acceleration at payload locations. Large angular momentum producing payload devices require separate analysis for this potential effect. Only hardware items that generate more than 100 ft–lb–s of angular momentum are required to report such disturbances.

4.2.3.2 VIBRATORY REQUIREMENT VERIFICATION (ALL PAYLOADS)

Payloads which use other than APM, JEM and USL rack interfaces must adopt the force limits appropriate for the envelope of locations in which they are to be attached.

The required technique for both alternative non–ARIS rack approaches is to determine payload vibration force magnitudes including possible structural amplification and attenuation of these forces in the payload between source and in the ISS. It is generally not sufficient to simply multiply measured payload to ISS interface location accelerations by the payload mass. Generally this would cause interface force to be overestimated, but at some modal frequencies of the ISS or the payload, interface forces could be underestimated. Two alternatives are suggested: the test only method and the test validated model method.

The microgravity vibration emissions verification criteria provides alternative methods of verification depending upon the nature and severity of vibration sources. The simplest technique is to assume that rack or ISS amplification can occur at any frequency above 0.1 Hz, requiring that calculated or measured source disturbance force levels as produced by motors, solenoids etc. be multiplied by a factor of 100. If the resulting force estimates exceed the limits of the appropriate IRD, then test or analysis will be required.

4.2.3.2.1 ISPR VERIFICATION

Either test or analysis must consider the effect of the rack attachment brackets provided by ISS, which will introduce a number of low and moderate frequency modes in the frequency range above 1 Hz. Test will generally provide greater relief due to the likelihood of increased modal damping over most of the frequency range, but may be difficult to accomplish with a realistic interface simulation. This is because, at least in the USL, racks interact with masses beyond the interface through an interface that is statically indeterminate. FEM modeling is necessary to determine the extent of interaction.

4.2.3.2.2 ATTACHED PAYLOAD VERIFICATION

Attached payloads use a simpler three–point attachment arrangement as the primary load path, and either modeling or test may be used. PEI provided interface impedance calculations must then be used to adjust model or test results to determine interface force. Standard PEI provided transfer functions may then be used to determine worst–case payload accelerations, which may then be compared against the SSP 57003 specified limits. The interface impedance adjustment will generally show less interface force than would be determined by simple interface force measurement or modeling against a rigid massive interface, particularly for frequencies above 10 Hz.

The details for performing these procedures are provided in the Generic Payload Microgravity Control Plan.

4.2.3.2.3 SOURCE VIBRATION MEASUREMENT

Source vibration measurement is recommended for all significant disturbance devices. The acceleration test should be performed for each significant translational or rotational degree of freedom. Each axis should be measured in a free condition or in a lightly constrained condition from which the constraining effects may be removed by calculation. Assuming interface forces are derived from interface acceleration measurement, this is generally possible if the vibration isolation system used to isolate payload has a natural frequency less than one–third of the lowest significant disturbance force frequency.

Background measurements must be taken for both worst–case operating and non–operating background measurement cases. Background vibration may be removed for each one–third octave band by RSS contribution estimation using the relationship:

$$G_{actual}^2 = G_{measured}^2 - G_{background}^2$$

If the background level exceeds 100% of the maximum acceptable value in any frequency band, alternative means of measurement with reduced background vibration should be found.

A minimum of four independent samples for each case must be taken from which the one–sigma estimates of measured and background acceleration must be applied. The force and moment magnitudes may then be calculated from the accelerometer location geometry and measurements of the mass properties of the test fixture.

4.2.3.3 TRANSIENT REQUIREMENT VERIFICATION

For a transient analysis, it would be acceptable to show by design for example, that a 100 pound translating mass does not produce a change in velocity of 3.4 ft/sec in ten seconds, the velocity that would be necessary to generate a 10 micro–g second impulse to ISS This calculation is based upon the space limitations within a rack.

Verification of ARIS rack is provided in the PGMCP with additional guidance available by the ARIS support group. The PGMCP provides design criteria for ARIS users to perform trades between rack stiffness, mass properties, on–board disturbance forces, umbilical characteristics and the resulting maximum level of ARIS performance. This is sufficient to assist payloads in early payload feasibility study and preliminary design. Limited additional guidance is available for payloads throughout the design process, including ARIS control system parameter setting, through the ARIS support group.

4.3 ELECTRICAL POWER SYSTEM

This section describes the suitability of the ISS Electrical Power System (EPS) to accommodate payloads requiring electrical power at flight UF–1 through 12A and at the completion of ISS assembly. During the assembly of ISS, electrical power generation hardware and software will be installed to provide power to operate the station hardware as well as user payloads. A description of the channelized architecture is provided. The description is given to assist researchers and payload developers with an understanding of the ISS Vehicle EPS and its operation.

The electrical power used to support the operation of ISS, including payloads, is generated by the incidence of solar energy onto photovoltaic (PV) arrays. PV arrays convert solar energy into electrical energy. Once converted, this energy produces a direct current that is guided to payload locations internal and external to the ISS pressurized elements. ISS has eight PV arrays. Each PV array is physically and functionally isolated from the other arrays, therefore, ISS contains eight separate electrical power sources (RSA hardware not included) for generating electricity. The arrays are symmetrically attached to the ISS truss segments. The truss segments attached to the PV arrays are located on both the Port and Starboard sides of the station. Each side contains four arrays connected to segments P4 and P6, and S4 and S6, as shown in Figure 4.3–1, Electrical Power System. Each array attached truss segment has two arrays symmetrically located to the individual segment. Two arrays in this single truss segment configuration are known as a PV module (e.g., PV modules P4, S4, P6, and S6).

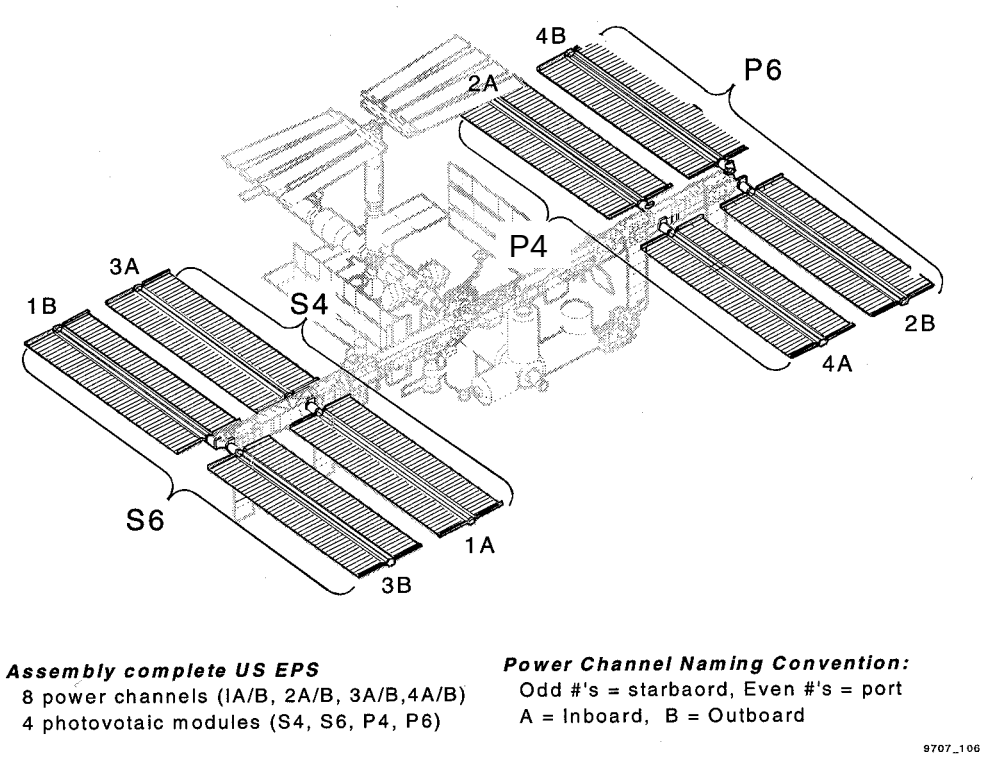

FIGURE 4.3–1 ELECTRICAL POWER SYSTEM

4.3.1 PRIMARY POWER SYSTEM

The energy produced by an array is routed on two paths. One path is used to deliver energy to batteries for energy storage, the other path connects to ISS electrical power consuming equipment via a network known as the Main Bus Switching Unit (MBSU). ISS is equipped with four MBSUs each containing two channels. A total of eight isolated channels receive main power feeds from the eight arrays. Power from each array can be channeled to multiple Electrical Power Consuming Equipment (EPCE) due to the MBSU design, see Figure 4.3.1–1, MBSU Power Distribution. The design of the MBSUs provides capability to electrically connect to each other by implementing the use of cross–ties. This feature provides redundancy in supplying power to ISS EPCE, excluding payloads. However, the sharing of power between critical subsystems is such that MSBU switching configuration will not be altered except in emergency situations

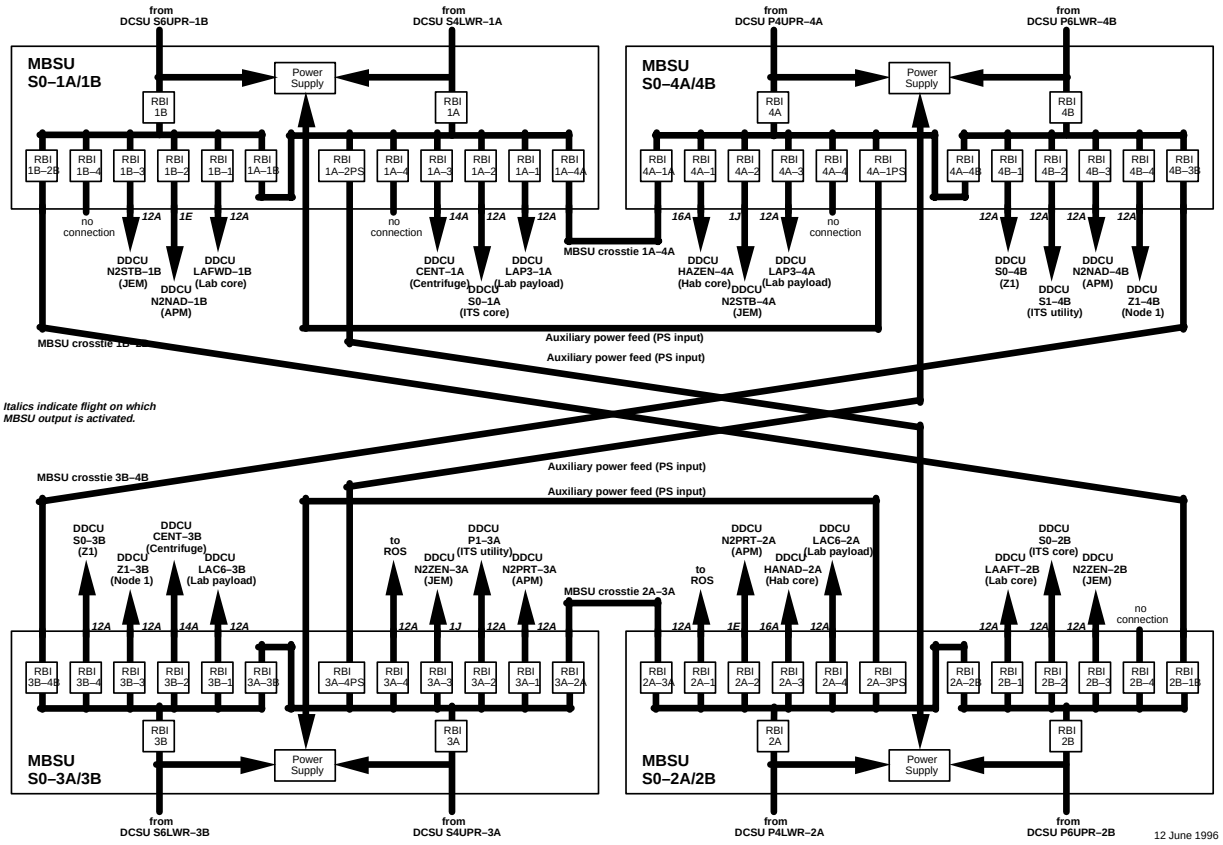

FIGURE 4.3.1–1 MBSU POWER DISTRIBUTION

Each channel of the MBSUs receives one primary input feed from an individual PV array. However, the output(s) consists of up to four feeds, with the current ISS configuration. Each MBSU output feed supplies power to a Direct Current–to–Direct Current Converter Unit (DDCU). The DDCU is responsible for converting primary direct current (dc) power into

secondary dc power using a transformer. Each DDCU has one primary power input and one secondary power output. The primary power input voltage to the DDCU is typically 160 volt (V) dc but can vary over a wide range, while the DDCU output is specified to be 124 V dc, which is the prescribed voltage for all users of the Secondary Power System. If any other voltage level is required by user loads, (e.g., payloads or crew equipment) then it is the responsibility of the user to perform the conversion from 124 V dc to the required voltage. The DDCU's main purposes are to:

- provide dc power conversion from primary to secondary power
- provide isolation between two or more power sources
- provide isolation between loads connected to other DDCUs
- regulate primary power within specified voltage and current limits
- provide some capability to shift power between power sources

4.3.2 SECONDARY POWER SYSTEM

The DDCU regulated output power is fed as input power to a Secondary Power Distribution Assembly (SPDA). A SPDA is a device used to house Remote Power Control Modules (RPCMs) (e.g., electronic circuit breakers). The single SPDA input feed is channeled to the RPCMs as inputs while the RPCM outputs supply power to the ISS EPCE (user) or to Remote Power Distribution Assemblies (RPDA), see Figure 4.3.2–1, Secondary Power System. The RPCMs contain solid–state or electromechanical relays, known as Remote Power Controllers (RPCs). These switches can be remotely commanded to control the flow of power through the distribution network and to the payloads. SPDAs and RPDAs are essentially housings that contain one or more RPCMs; the designation, either SPDA or RPDA, refers to the level of hierarchy within the distribution system. As a general rule, the hierarchy dictates that DDCUs feed power to SPDAs, which either provide power to one or more user loads or RPDAs. RPDAs, in turn, feed power to one or more user loads. RPCMs have only one power input; thus, if power is lost at any level of the Secondary Power System, all downstream user loads will be without power. As mentioned previously, there is no redundancy in the Secondary Power System; rather, redundancy is a function of the user's load. A critical user load may be able to select between two input power sources that use different power channels and thus different secondary power paths.

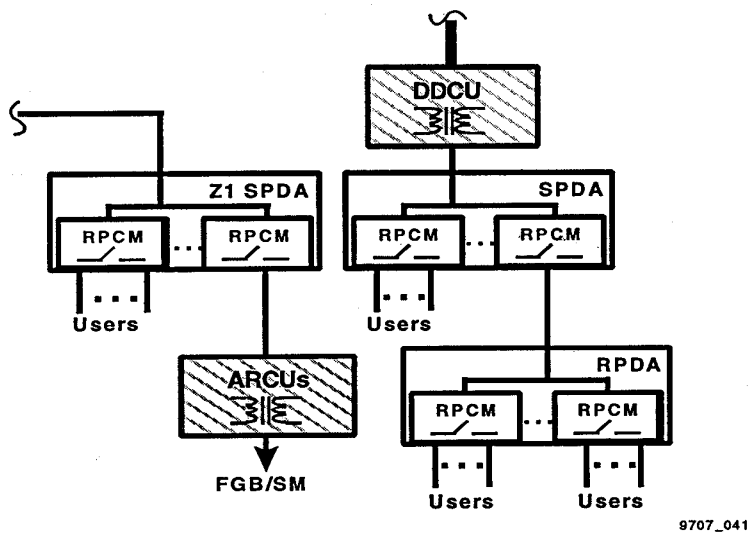

FIGURE 4.3.2–1 SECONDARY POWER SYSTEM

Since multiple EPCE receives power from the same source, all EPCE supported by a single source competes for the total single source power available. Due to the competition between loads, operational plans will be implemented for scheduling power usage among all payloads, including some ISS core system loads.

Some DDCUs supplying power to payloads may be electrically connected in parallel to increase the allocation of an otherwise isolated payload bus. The power level is regulated by DDCU set points, which may range to a maximum ratio of 30% to 70%. For maximum total power a load connected to the paralleled DDCUs receives 50% of the total from each as shown in Example 1.

Example 1: Given: 12.5 kW load requirement
(50%)(12.5 kW) + (50%)(12.5 kW) = 12.5 kW

However, DDCU set points may be altered to increase availability of ISS power to a single payload. Set point alteration may reduce available power on one channel to increase power on others as in Example 2.

Example 2: Given: 12.5 kW load requirement
DDCU1 set point = 70%
DDCU2 set point = 30%

Therefore: (70%)(12.5 kW) = 8.75 kW
(30%)(12.5 kW) = 3.75 kW

The DDCU output is limited to 6.25 kW as rated. Thus, 8.75 kW is not achievable and can be no greater than 6.25 kW resulting in the following maximum power available to the load:

PMax = (6.25 kW) + (3.75 kW) = 10 kW

The channel connected to the 30% load now has an additional 2.5 kW to supply to other loads. In the overall electrical power architecture scheme, the set point adjustments are known to increase the EPS effectiveness.

EPCE connected to ISPR interfaces receives Type B power quality, Figure 4.3.2–2, Electrical Power System Interface Locations.

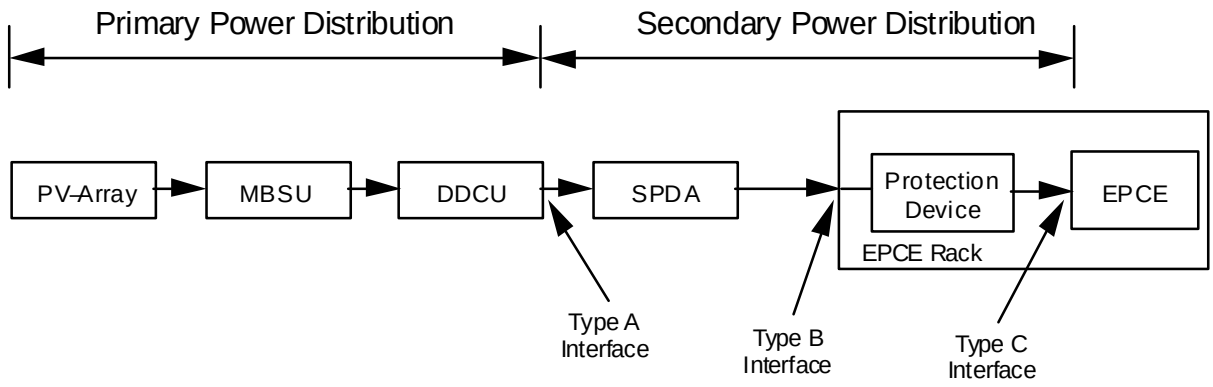

FIGURE 4.3.2–2 ELECTRICAL POWER SYSTEM INTERFACE LOCATIONS

Each powered payload requires a physical and functional interface to the ISS EPS; however, all interfaces are not common. ISPR locations throughout ISS have similar features, but distinct EPS characteristics are recognized between the USL, APM, and JEM. These include but are not limited to overload protection and load and source impedance characteristics. The USL secondary power distribution sources and capabilities are defined in Table 4.3.2–I, Secondary Power Sources and Capabilities.

TABLE 4.3.2–I SECONDARY POWER SOURCES AND CAPABILITIES

SPDA	ISPR	Location	RPC	AMPS	Watts
2A3B	1	LAB1O4	III	50	6000
1A4A	1	LAB1O4	I	12	1440
2A3B	2	LAB1O5	VI	25	3000
1A4A	2	LAB1O5	I	12	1440
2A3B	3	LAB1S3	III	50	6000
1A4A	3	LAB1S3	III	50	6000
2A3B	4	LAB1O2	VI	25	3000
1A4A	4	LAB1O2	I	12	1440
2A3B	5	LAB1O3	III	50	6000
1A4A	5	LAB1O3	III	50	6000

TABLE 4.3.2–I SECONDARY POWER SOURCES AND CAPABILITIES

SPDA	ISPR	Location	RPC	AMPS	Watts
2A3B	6	LAB1S1	I	12	1440
1A4A	6	LAB1S1	VI	25	3000
2A3B	7	LAB1S2	I	12	1440
1A4A	7	LAB1S2	III	50	6000
2A3B	8	LAB1O1	VI	25	3000
1A4A	8	LAB1O1	I	12	1440
2A3B	9	LAB1S4	III	50	6000
1A4A	9	LAB1S4	V	12	1440
2A3B	10	LAB1P1	V	12	1440
1A4A	10	LAB1P1	III	50	6000
2A3B	11	LAB1P2	III	50	6000
1A4A	11	LAB1P2	III	50	6000
2A3B	12	LAB1D3	V	12	1440
1A4A	12	LAB1D3	VI	25	3000
2A3B	13	LAB1P4	III	50	6000
1A4A	13	LAB1P4	V	12	1440
1A4A	UOP1	LAX1	I	12	1440
1A4A	UOP2	LAX1	I	12	1440
2A3B	UOP3	LAX4	I	12	1440
2A3B	UOP4	LAX4	I	12	1440

The goal of the ISS Program is to provide a common set of EPS payload design requirements that assure all ISPR locations accommodate interchangeable ISPR hardware such that normal (expected) operability occurs. Payload locations within the CAM are expected to be analogous; however, the EPS characteristics will be similar and not identical to those at ISPRs.

4.3.3 EPS ACCOMMODATIONS

There are two basic configurations of the EPS to be used during buildup. The initial configuration requires minimal EPS complexity and enables construction to progress without interfacing with the PV array system. The final configuration increases the total availability of power by the addition of arrays and ISS attitude independent pointing capability. Additionally, payload racks are added incrementally as the ISS construction progresses.

4.3.3.1 FLIGHTS UF–1 THROUGH 12A

The early assembly of ISS requires two flight attitude configurations, alternating through each configuration over roughly 60 day periods. To increase power availability in the absence of alpha joint solar tracking capability, the attitude of the ISS is changed upon exceeding approximately Beta 38 degrees until after 12A, see Figure 4.3.3.1–1, Typical ISS annual Solar Beta Variation. Until 12A, the beta joints and continuous control of the vehicle attitude are used to increase ISS power. For high Beta conditions (the ISS orbital plane exceeds a 38 degrees angle from the solar vector) the ISS will be placed in an XPOP attitude, which places the longitudinal axis of the USL perpendicular to the direction of flight, parallel to the local earth surface. This enables the beta joints to accommodate the out–of–plane alignment of the solar arrays. At this time, the vehicle attitude is modified with each orbital track so that the arrays are pointed toward the sun.

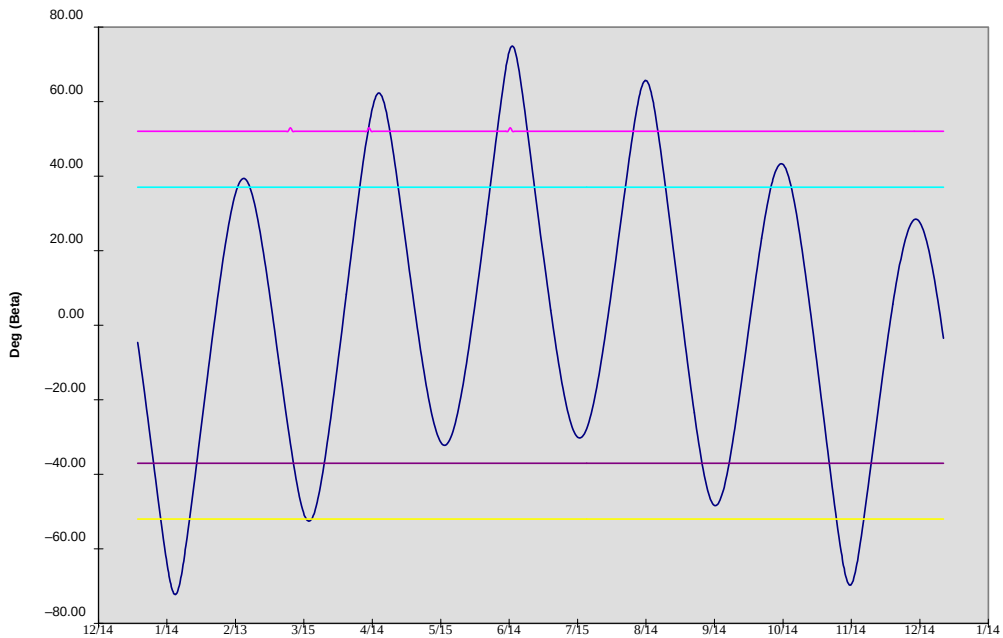

FIGURE 4.3.3.1–1 TYPICAL ISS ANNUAL SOLOR BETA VARIATION

When beta decreases to less than 38 degrees, the ISS is placed in a fixed LVLH attitude and the beta joints are used to track the sun from forward horizon to aft horizon. Under these two flight attitudes, alternating several times a year, power is increased to payloads with a minimum of EPS hardware.

4.3.3.2 ASSEMBLY COMPLETE

At assembly complete there are thirty–seven ISPR powered locations throughout the ISS: 13 in the USL, 10 in the JEM, 10 in the APM, and 4 in the CAM (reference Section 3.1, Figures 3.1–1 through 3.1–5). Capabilities are available at assembly complete to provide two independent 6.25 kW power feeds to the CAM. These power feeds are used to deliver power to the four ISPR payload locations in addition to CAM subsystems.

Outside the plus and minus 52 degree solar beta angle range the vehicle will be in a maneuver mode; therefore, the assembly complete requirement for 6.5 kW continuous power applies and will be met. Assembly complete power estimates for payloads indicate a range of 24.8 kW to 31.7 kW is provided for payload operations and powering equipment necessary to support payload operations.

Each powered payload location, except for 12 kW locations, has a separate power feed to supply essential/auxiliary power. Essential/auxiliary power is power that provides the capability of ISPR and external payload locations to safely (i.e., without payload damage) deactivate payloads to a zero power level such as to allow for later payload reactivation when possible. The three 12 kW locations have two main power feeds from two parallel sets of DDCUs. Essential/auxiliary power to 12 kW locations is capable of being delivered by one of the two main feeds if there is one main feed failure. Essential/auxiliary feeds are rated for 12 amperes (1.4 kW) at the ten non–12 kW ISPR locations within the USL, 50 amperes (6 kW) at the CAM and the three 12 kW ISPR locations within the USL.

The typical power available for use by payloads and payload support equipment from stages UF–1 through 12A and at assembly complete has been estimated, see Table 4.3.3.2–I, Estimated Assembly Complete Payload Operational Power. It should be noted, the power available for utilization was obtained by subtracting the required ISS housekeeping power from the ISS power generated by the PV Arrays. Limitations to available power for payload utilization exist due to active thermal heat rejection and channelized architecture limitations. These limitations are not factored into the power data in this report.

TABLE 4.3.3.2–I ASSEMBLY COMPLETE ESTIMATED PAYLOAD OPERATIONAL POWER

	ESTIMATED POWER FOR UTILIZATION (kW)		
STAGE	LOW BETA	MID BETA	HIGH BETA
UF–1	5.8	8.1	12.9
7A	5.2	9.1	13.8
4R	5.2	9.1	12.3
8A	4.0	8.0	11.4
UF–2	4.0	7.9	11.3
9A	2.9	7.2	10.6

TABLE 4.3.3.2–I ASSEMBLY COMPLETE ESTIMATED PAYLOAD OPERATIONAL POWER

	ESTIMATED POWER FOR UTILIZATION (kW)		
STAGE	LOW BETA	MID BETA	HIGH BETA
9A.1	1.4	5.7	9.1
11A	0.9	5.7	5.7
12A	4.9	5.8	5.8
AC	31.7	24.8	24.8

* ISS power generation percentage of calendar year: 62% Low, 19% Mid, and 19% High Beta periods.

Note: Neither RSA power transfers, channelized architecture limitations, nor thermal heat rejection are considered.

The electrical power levels listed above can be provided to payloads dependent upon solar viewing conditions, PV array, Earth shadowing conditions, and thermal heat rejection conditions. Under high beta conditions, solar heating increases the thermal load upon the system and restricts power usage. Likewise, battery recharge capabilities and battery life considerations allow greater power to be provided to payloads during the solar viewing (day) portion of the orbit than during the night portion of the orbit. The demands of isolation prevent frequent switching of arrays or the mixing of power on a large scale from multiple sources in such a way that the primary power for each rack location is provided essentially from a single PV array, and the auxiliary power from another PV array. The primary USL power sources are identified as Arrays 3B and 4A, with 3B receiving some power from 2A through a paired set of DDCUs and 4A receiving some power from 1A in similar fashion, see Figure 4.3.3.2–1, ISS Solar Array Configuration and Primary USL Power Sources**.** Although some power can be shifted from other arrays to 2A and 1A in daisy chain fashion, it is difficult to make up for a temporary shortfall on the USL primary arrays with power from other sources for more than a few thousand watts.

These effects combine to cause significant variation in power availability over each approximately 90 minute orbital cycle. During some beta conditions during the assembly stages shadowing may occur over significant periods of the orbit, while the ISS is in full sunlight, due to obstruction by modules, radiators and other solar arrays. A 90 minute available power profile will repeat in similar fashion over many orbits, gradually shifting in pattern as the beta conditions vary. Particularly under low beta conditions, the maximum power available will vary significantly between day and night. Payloads which demand high power may take advantage of this 90 minute cycle to take advantage of the maximum available power. Only under these conditions may the estimated power values provided in Table 4.3.3.2–I, be fully utilized.

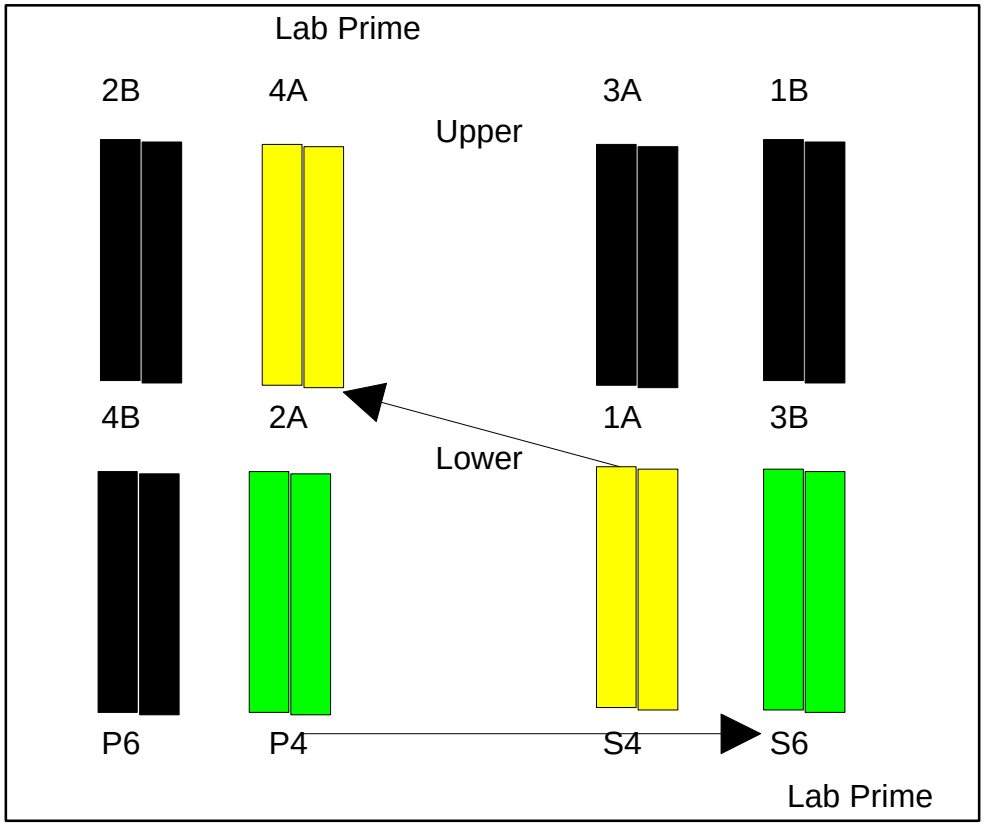

FIGURE 4.3.3.2–1 ISS SOLAR ARRAY CONFIGURATION AND PRIMARY USL POWER SOURCES

4.3.4 ELECTRICAL DESIGN GUIDELINES

The following guidelines supplement the requirements stated in SSP 57000 and other IRD referenced documents to provide guidelines to payload developers.

4.3.4.1 PAYLOAD NOISE AND TRANSIENT SUSCEPTIBILITY GUIDELINES

Integrated racks and portable equipment must be capable of operating in the line noise and occasional non–normal voltage conditions as specified in the SSP 57000. One combination of requirements which should be addressed early in the payload design is accommodation of fault clearing transients and payload input impedance. These two requirements, coupled with electrical power requirements, frequently determine payload input filter size and mass.

The short duration (12 µs maximum) transient can produce component damaging voltages for payload power systems. Figure 4.3.4.1–1 is a resprentative schematic of the ISS system which produces this transient, depicting the abrupt stop of current in a parallel loop following a temporary overload condition. Such a situation could exist following the opening of an RPC due to a short circuit developing in another payload rack. The RPC overload condition results in a

potentially high voltage spike when the primary current path is opened. Payloads may use this representative curcuit to estimate the effects of payload power absorbing devices, EMI filters and other front end power system components to accommocate this condition.

It should also be noted that the fault clearing transient is presented in SSP 57000 as a composite of three possible transient conditions, one lasting less than 12 microseconds, another lasting less than 150 microseconds and a third lasting less than 300 microseconds. It is not necessary to show that a payload can tolerate all of these transients simultaneously as shown in the composite figure. Each transient duration may be treated separately.

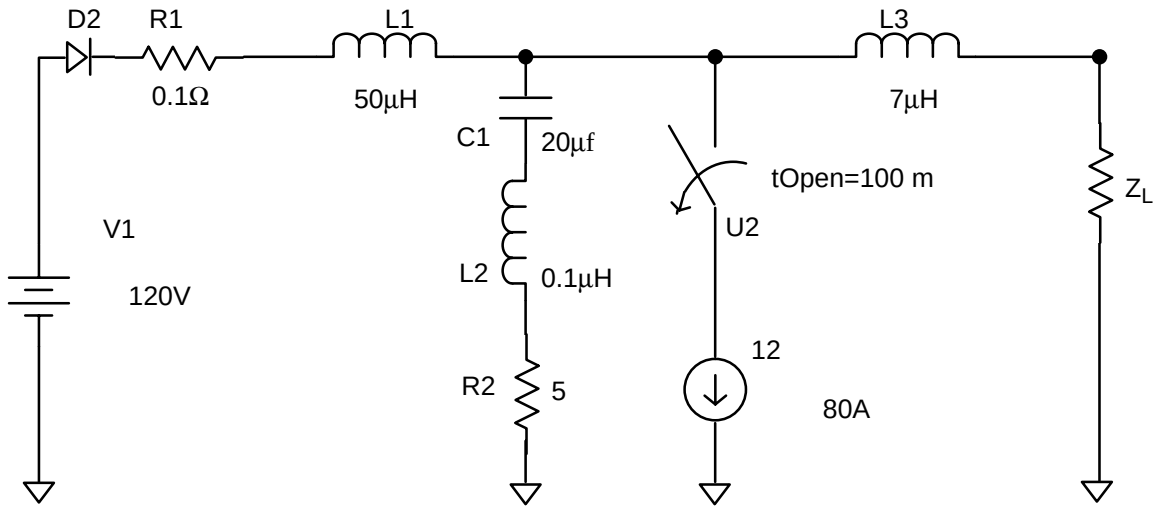

FIGURE 4.3.4.1–1 ISS SYSTEM REPRESENTATIVE ELECTRICAL SCHEMATIC

4.3.4.2 WIRE GAUGE SIZE CHANGES

Remote power controllers are recommended whenever wire gauge is reduced; however, it is permissible to use fuses and other approved power protection devices as alternatives for non safety–critical functions. The reduction of wire size and branching to smaller gauge wires is permitted only in aerospace enclosures.

The use of multiple smaller gauge conductors in parallel to replace a larger gauge wire, although permitted, is discouraged. A branching of two parallel conductors requires that each path be fused to the reduced wire gauge, and the branching of more than two parallel conductors requires fuses at each end of each parallel wire. Also, means of acceptable splicing must be provided to meet the wire gauge requirements for wire insertion in pins.

4.3.4.3 MAIN AND AUXILIARY POWER ISOLATION

The requirement for isolation of main and auxiliary power precludes the use of “OR” diodes or other low impedance devices to effectively join the two sources. If primary power is lost, it is permissible to automatically switch from one source to another if isolation of the primary power leads is maintained at all times. It is permissible to temporarily join return lines for alternate power systems if it can be shown that the primary power connections are disconnected first.

4.3.4.4 ISPR ELECTRICAL ACCOMMODATIONS

The ISPR electrical interface for the USL, APM and JEM is through the UIP, which provides RPC protection for interface power cables and a standard connector interface. This power service is Interface “B”, having a steady–state voltage range of 116 V to 126 Vdc. The 4 AWG wire required for UIP connection can be stiff, and consideration should be given to the use of 90 degree backshells to reduce potential bend radius problems. A ground is provided at all ISPR locations through each UIP connector, primarily to meet the requirements of ARIS. This ground is available for payload use, but is not required.

The main and auxiliary power provided to ISPR locations is actually ISS power from two separate primary sources. Auxiliary power requires margin to be retained on the alternate power bus in the event that auxiliary power was required. In a sense, this is wasted power which cannot be utilized unless an off–nominal condition occurs. Consequently, in some cases it may be desirable to use both main and auxiliary power in an operational mode, rather than holding auxiliary power for reserve, if the payload can function on either power source if the other is lost. Such flexibility will simultaneously add payload robustness and increase utilization of ISS energy.

4.3.4.5 PORTABLE EQUIPMENT ACCOMMODATIONS

4.3.4.5.1 PORTABLE EQUIPMENT/POWER CORDS

A. Non–battery powered portable equipment will incorporate a three–wire power cord. A three wire power cord consists of a (+) supply lead, a (–) return lead and a safety (green) wire; one end of the safety (green) wire is connected to the portable equipment chassis (and all exposed conductive surfaces) and the other end is connected to structure of the utility outlet (Payload provided outlet, UOP, etc.). A system of double insulation or its equivalent, when approved by NASA, may be used without a ground wire.

B. Non–battery powered portable equipment will provide a redundant ground path terminated at the connector back shell for output voltages exceeding 30 volts rms or dc nominal (32 volts rms or dc maximum). The redundant ground may be a fourth wire or the cable shield, provided that the shield is sized to carry the fault load.

Note: Non–battery powered portable equipment will provide 1 Mohm dc isolation between power input to chassis and return to chassis invoked by paragraph 3.2.1.2 of the SSP30240 as defined in SSP57000, paragraph 3.2.4.1.

4.3.4.5.2 PORTABLE EQUIPMENT CIRCUIT PROTECTION

The Utility Outlet Panel (UOP) circuits are protected by ISS provided RPCs at each UOP location. Each UOP provides two user connections. Therefore, two UOP users will share a common RPC and it is required that independent circuit protection be provided by each user. It is generally acceptable to provide such protection at the input to portable equipment if the power cord itself is not exposed to unusual hazards.

4.3.4.6 ELECTROMAGNETIC COMPATIBILITY GUIDELINES (EMC)

The following guidelines are extracted from the EMI/EMC related ISS requirements which are the governing documents for EMC related matters.

- SSP 30240 Space Station Grounding Requirements
- SSP 30242 Space Station Cable/Wire Design and Control Requirements for Electromagnetic Compatibility
- SSP 30243 Space Station Systems Requirements for Electromagnetic Compatibility
- SSP 30237 Space Station Electromagnetic Emission and Suceptibility Requirements for Electromagnetic Compatibility
- SSP 30238 Space Station Electromagnetic Techniques
- SSP 30245 Space Station Electrical Bonding Requirements

4.3.4.6.1 ELECTRICAL GROUNDING

The payload EPCE is required to meet all requirements specified in Section 3 of SSP 30240.

4.3.4.6.1.1 PRIMARY ELECTRICAL POWER

The ISS primary electrical power system will be distributed single point grounded. Users of power will be dc isolated such that the primary electrical power ground configuration is not dependent on the presence or absence of flight elements, systems, subsystems, equipment, or users. Primary electrical power will be dc isolated from chassis, structure, equipment conditioned power return/reference, and signal returns by a minimum of 1 megohm, individually, when grounds are not terminated to chassis or structure.

4.3.4.6.1.1.1 SECONDARY AND TERTIARY ELECTRICAL POWER

Secondary and tertiary electrical power will be single point grounded. Secondary electrical power will be dc isolated from chassis, structure, equipment conditioned power return/reference, and signal circuits by a minimum of 1 megohm, individually, when all grounds are not terminated to chassis or structure.

4.3.4.6.1.1.2 CONTROL POWER BUS RETURN

The dc power control bus will be independent of the primary electrical power and will be referenced to the system reference at a single location.

4.3.4.6.1.1.3 ISOLATED ELECTRICAL POWER WITHIN EQUIPMENT

Within equipment, conditioned electrical power will be dc isolated from chassis and structure except at no more than one electrically conductive common point. Where termination is desired, the equipment designer has the option of either bringing the single point reference external to the equipment for termination to the nearest structure ground or, of terminating the reference point to the chassis internal to the equipment; both methods may be used simultaneously.

4.3.4.6.1.1.4 ISOLATED ELECTRICAL POWER BETWEEN EQUIPMENT

Where equipment further conditions and isolates electrical power, e.g., for external channel–to–channel isolation or external signal–to–signal isolation, each secondary conditioned power reference will be treated individually in the same manner as in paragraph 4.3.4.6.1.1.3.

4.3.4.6.1.1.5 LOAD CONVERSION

Where load conversion is done to supply any form of conditioned power to several devices or functions, that conversion will re–establish a single point reference for the serviced equipment or functions.

4.3.4.6.1.1.6 SIGNAL CIRCUIT RETURN GROUNDING

Signal circuit electrical power will be dc isolated from chassis, structure, and equipment conditioned power return/reference, by a minimum of 1 megohm, individually, when not terminated to chassis or structure. Under no circumstances will separate flight elements, assembly elements, systems, subsystems, or equipment depend on other equipment for signal reference or signal return grounding unless they are dependent upon the other equipment for power.

4.3.4.6.1.1.7 COMMON MODE NOISE AND INPUT ISOLATION

Power input to integrated rack or EPCE is required to be isolated from chassis/case ground in accordance with SSP 30240 in order to provide normal performance when the common mode noise voltages and currents are present at the input terminals of integrated rack or EPCE that draws power from ISS power sources. These noises may be as high as the following:

1) Power input voltages may be offset by an AC voltage of up to 1.25 V rms from 30 Hz to 50 kHz, and by a DC voltage of up to 5.0 V with respect to Space Station structural ground. These AC and DC components are related (reach minimum and maximum values together), and can occur during normal steady state power system conditions.

2) AC common mode currents of up to 20 milliamperes total, for both lines, and between 50 kHz and 10 MHz may be delivered to the power input terminals from other connected loads via the electric power system. These current levels may be present during normal steady state power system conditions.

3) Transient common voltages equal to +/– 120 volts can occur within the Space Station power distribution system as a result of faults occurring somewhere in the same power domain. This may be caused, for example, by a short circuit between the hot line and chassis. Duration of the transient will typically be 10 microseconds, or less.

4.3.4.6.2 ELECTRICAL BONDING

Electrical bonding will be in accordance with SSP 30245. The bond path from the payload electrical equipment to the ISS structure is from the payload equipment box surface/strap interface to rack structure, through rack structure, through rack bonding interfaces (nickle plated aluminum) at 2 places to an approved bond strap to the ISS structure. Each fayed joint in the bond path must meet the 2.5-milliohm dc resistance requirement (Class R) and the total bond resistance from the equipment box surface to structure is less than 0.1 ohm (Class H). Per SSP 30245, the joint materials used in the bond path are selected to be compatible. The bond path from the rack bonding interface locations to the structure is not the responsibility of the payloads; however, payloads are required to account for the dc resistance in this path when computing the total resistance of the bonding path to the structure.

The ISPR rack is certified to provide a less than 0.05-ohm dc resistance from any of the rack mounting locations to the structure after proper installation. This path is through a bond strap that is permanently attached to the standoffs. Each bond joint in this path is less than 2.5 mohm (Class R). No on–board test is required to verify the bond path resistance for the rack-to-structure bond.

Payloads will maintain a less than 0.05 Ohm dc resistance from the electrical components to the rack mounting locations to meet 0.1 Ohm (Class H) requirement of SSP 30245, as well as maintaining 2.5 milliohm resistance for each bond joint in the path for Class R.

Typically, payload's bonding analysis will consist of:

- identification of all components that require bonding
- identification of the primary bond path for each component that requires bonding
- evaluation of materials compatibility for each fayed joint in the electrical path
- computation of the bond resistance from each electrical component to structure
- identification of flow–down of electrical bonding requirements to drawings and specifications.

4.3.4.6.3 ELECTROMAGNETIC INTERFERENCE (EMI)

Payload EPCE are required to meet all EMI requirements of SSP 30237 for conducted emissions and radiated emissions. Tests will be performed and data submitted for conducted susceptibility and radiated susceptibility in addition to that for conducted emissions and radiated emissions. The EMI test methods are as specified in SSP 30238.

4.3.4.6.4 ELECTROSTATIC DISCHARGE

Unpowered EPCE should be designed to incur no damage by Electrostatic Discharge (ESD) equal to or less than 4,000 V to the case or any pin on external connectors. EPCE that may be damaged by ESD between 4,000 and 15,000 V must have a label affixed to the case in a location clearly visible in the installed position. These voltages are the result of charges that may be accumulated and discharged from ground personnel or crew members during equipment installation or removal.

4.3.4.6.5 ALTERNATING CURRENT MAGNETIC FIELDS

Payload–generated ac magnetic fields, measured at a distance of 7 cm from the enclosure of the integrated rack or EPCE (portable equipment), will not exceed 140 decibel (dB) above 1 picotesla for a frequency at 30 Hz, then falling 26.5 dB per decade to 3.5 kHz, and 85 db for frequencies raging from 3.5 kHz to 50 kHz.

4.3.4.6.6 DIRECT CURRENT MAGNETIC FIELDS

Payload-generated dc magnetic fields will not exceed 170 dB picotesla at a distance of 7 cm from any equipment. This applies to electromagnetic and permanent magnetic devices.

4.3.4.6.7 CABLE AND WIRE DESIGN

All ISS system cables and external payload rack interconnecting cables must be designed to meet SSP 30242 requirements including physical isolation, separation between cables with different EMI classifications, and proper shield termination to ground. Each wire bundle must be coded with a bundle code which is the same as the EMI classification of the circuits which it contains. All circuits routed together in a bundle should be of the same classification. Separation of wire bundles should be maintained to meet a greater than 20 dB attenuation requirement of SSP 30243.

Circuits having different EMI classifications or redundancy codes should not be commonly bundled but may be routed in a common connector if a 20-dB coupling margin is maintained. In cases where wiring redundancy is a requirement, separate cable bundles should be assigned for redundant functions. Shields should be terminated at both ends and at intermediate break points directly to structure of chassis, through connector backshells or direct wire connection per the methodology specified in SSP 30240. Radio Frequency (RF) circuit shields should be structure grounded as often as possible. The length of the termination-to-ground lead for RF circuits is the minimum practical and will not exceed 3 in.

4.3.4.7 SAFETY-SUBSYSTEM CIRCUITS REDUNDANCY

Payloads are required to meet the safety-subsystem circuits redundancy requirements defined in NSTS 18798, Memo No. ET12-90-115. Payload safety-subsystem circuits redundant subsystems are required to be the maximum practical distance to ensure that an unexpected event that damages one is not likely to prevent the others from performing the function. Redundant functions that are required to prevent a catastrophic hazard must not be routed through a single connector. Redundant safety-subsystem circuits must be routed in separate cable bundles via different routing paths which are separated to the maximum extent possible. Where separate routing paths are not possible, at least one-half inch separation between wire bundles is required under any level of vibration or shock to which the vehicle will be exposed.

4.3.4.8 POWER DISTRIBUTION PROTECTION CIRCUITRY

Payload wire size and circuit protecting devices will be selected as defined in TM 102179, Selection of Wires and Circuit Protection Devices for STS Orbiter Vehicle, Payload Electrical Circuits. Power protection circuitry must be rated so that each power protection device is assured of tripping at 130% of rated device current or less.

4.3.4.9 PLUGS AND RECEPTACLES

The design of electrical connectors should make it impossible to inadvertently reverse a connection or mate the wrong connectors if a hazardous condition can result. Payload and on-orbit support equipment, wire harnesses, and connectors must be designed such that no blind

connections or disconnections must be made during payload installation, operation, removal, or maintenance on orbit unless the design incorporates scoop proof connectors or other protective features.

Payload equipment, for which mismating or cross-connection may damage ISS-provided equipment, plugs, and receptacles (connectors), must be selected and applied such that they cannot be mismated or cross-connected in the intended system as well as adjacent systems. Although identification markings or labels are required, the use of identification alone is not sufficient to prevent mismating. For all other payload connections, combinations of identification, keying and clocking, and equipment test and checkout, procedures should be employed at the payload developer's discretion to minimize equipment risk while maximizing on-orbit operability. As a minimum, connectors must be uniquely labeled.

Payload connectors must be selected and applied such that they have sufficient mechanical protection to mitigate inadvertent crewmember contact with exposed electrical contacts.

Payload connectors must be specifically designed and approved for mating and demating in the existing environment under the loads being carried, or connectors must not be mated or demated until voltages have been removed (dead-faced) from the powered side(s) of the connectors.

4.3.4.10 PORTABLE EQUIPMENT/POWER CORDS

GFCI used to protect portable equipment is considered as one hazard control. Payload non-battery powered portable equipment will incorporate a three-wire power cord with one wire at ground potential. A system of double insulation or its equivalent, when approved by NASA, may be used without a ground wire.

4.3.4.11 OVERLOAD PROTECTION

Overload protective devices must not be accessible without opening a door or cover, except that an operating handle or operating button of a circuit breaker, the cap of an extractor-type fuse holder, and similar parts may project outside the enclosure.

The arrangement of an extractor-type fuse holder is required to be such that the fuse will not be positively held or gripped by any parts of the fuse holder while energized parts are exposed at any time during replacement. The load will be connected to the fuse holder terminal that terminates the removable cap assembly.

Overload protection (fuses and circuit breakers) intended to be manually replaced or physically reset on orbit must be located where they can be seen and replaced or reset without removing other components.

Each overload protector (fuse or circuit breaker) intended to be manually replaced or physically reset on orbit must be readily identified or keyed for its proper value.

4.3.4.12 SWITCHES/CONTROLS

Payload switches/controls must not provide automatic starting after an overload-initiated shutdown.

Payload switches/controls performing on/off power functions must open or dead-face all supply circuit conductors except the power return and the equipment grounding conductor while in the power-off position. Power-off markings and/or indications may be used only if all parts, with the exception of overcurrent devices and associated EMI filters, are disconnected from the supply circuit. Standby, charging, or other appropriate nomenclature must be used to indicate that the supply circuit is not completely disconnected for this power condition.

4.3.4.13 GROUNDING FAULT CIRCUIT INTERRUPTERS

A payload non-portable utility outlet intended to supply power to portable equipment must include a GFCI, as an electrical hazard control, in the power path to the portable equipment. Detailed requirements for the GFCIs are contained in SSP 57000.

4.3.4.14 POWER MAINTENANCE SWITCH

Each payload rack must contain a guarded, two-position, manual switch installed in a visible and accessible location on the front of the rack to interface with connector J43 (UIP) pins 19 and 20. The switch must provide means to inhibit the application of electrical power to the rack while the rack is being installed, removed, or is undergoing maintenance. Positive indication that power is inhibited must be provided via an ISS-supplied Portable Computer System (PCS) display. In the “off” position (switch open) or with the mating connector to J43 (UIP) unmated (rack removed), all power feeds to the rack must be locked out. In the “on” position (switch closed) the power feed to the rack must be enabled.

4.3.4.15 LOSS OF POWER

Payloads are required to fail safe in the event of a total or partial loss of power regardless of the availability of Essential/Auxiliary power.

4.3.4.16 EMI SUSCEPTIBILITY FOR SAFETY-SUBSYSTEM CIRCUITS

Payload safety-subsystem circuits, as defined in SSP 30243, are required to meet the margins defined in SSP 30243, paragraph 3.2.3, for the conducted susceptibility limits specified in SSP 30237, paragraph 3.2.2, and the radiated susceptibility limits specified in SSP 30237, paragraph 3.2.3.

4.4 COMMAND AND DATA HANDLING (C&DH)

The ISS C&DH function consists of hardware and software that provide services for command, control, and data distribution for all ISS systems, subsystems, and payloads. The top level (system level) C&DH architecture contains redundant Command and Control (C&C), Multiplexer–Demultiplexers (MDM), and MIL-STD-1553B control buses. The payload service level includes the payload Multiplexer–Demultiplexer (MDM) for Low Rate Data Link (LRDL) (1553B local bus) data and command distribution, the Payload Ethernet Hub/Gateway (PEHG) and High Rate Data Link (HRDL) for payload-to-payload communication and data downlink service. LRDL other than payload safety-related data and medium rate data are downlinked via the HRDL to the ground. Safety-related data is routed via the C&C MDM to S-band for downlink. The onboard crew for command and display interface uses the Space System Computer (SSC). The payload commands can be uplinked from a ground site (through Mission Control Center in Houston (MCC-H)), issued from the SSC, or issued by a payload MDM automated procedure. The C&DH architecture diagram is shown in Figure 4.4–1 and Figure 4.4–2.

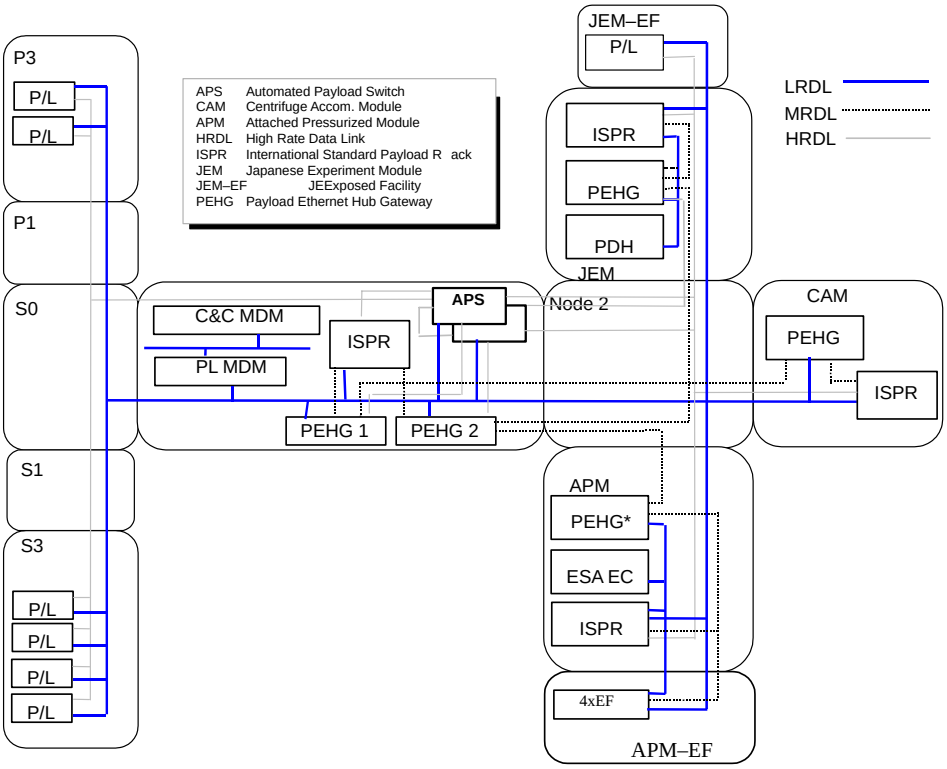

FIGURE 4.4–1 C&DH PAYLOAD ARCHITECTURE BY MODULE LAYOUT

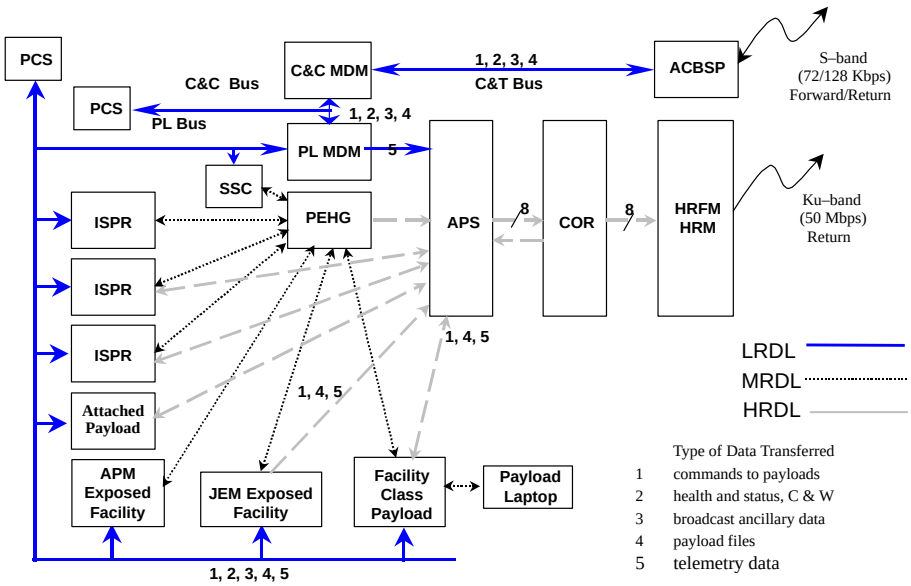

FIGURE 4.4–2 C&DH PAYLOAD ARCHITECTURE BY FUNCTIONAL DATA FLOW

4.4.1 C&DH PAYLOAD SUPPORT ARCHITECTURE

The payload MDM provides services to support pressurized payloads located in the USL, CAM, JEM, APM, and attached ports P3 and S3. The payload MDM provides the overall C&C functions for the payload complement. Other functions include gathering and forwarding payload complement safety data to the C&C MDM; distribution of commands from the SSC and ground, or onboard execution of automated procedures. Automated procedures include sending requests (via Payload Executive Processor (PEP) services) to the C&C MDM for executing limited set of core commands; and controlling (via PEP services) PEHG and Automated Payload Switch (APS) configurations**.** In addition, the payload MDM provides crew interface management for the SSCs attached to the 1553B payload local buses. The Solid State Mass Memory Unit (SSMMU) in the payload MDM provides storage of display files for the SSCs; storage of payload configuration files; and storage of Timeliner automated payload procedures.

Communication resources include high rate data routing for payload-to-downlink communications, medium rate routing for multiplexing medium rate telemetry data through the downlink from multiple USL payload locations, and low rate telemetry routing for a limited set of payloads through the payload MDM. The HRDLs or the Medium Rate Data Link (MRDL) provides payload-to-payload communications capability for payloads and/or downlink services.

4.4.1.1 PAYLOAD MDM

The payload MDM provides the U.S. payload complement command, control, and monitoring functions. The software that implements the PEP is resident in the payload MDM. The payload MDM provides one single redundant 1553B payload local bus for command/data distribution to (and data gathering from) the devices and payloads attached to that 1553B payload local bus. A total of six separate single redundant payload local buses interface with payloads in the USL, JEM, APM, and external sites. For the payload 1553B bus address assignment, see Appendix B, Bus Profiles, of D684–10500–3. Each payload bus has its unique 100-ms processing frame, as shown in Section 3.2, Bus Address Assignments, of SSP 50193–1, Part 1.

The 1553B payload local buses provide the payloads with commands from onboard automated payload procedures, SSCs, and ground control centers, and data such as timing, broadcast ancillary data (core system data), file transfer, and ancillary data (payload and system data). Payloads send their payload health and status/safety data, file transfer data, and low rate payload telemetry data through the 1553B payload local bus to the payload MDM. Also, pressurized payloads may request a limited set of core system commands via Timeliner procedures (see 4.4.1.1.2 for Timeliner description). A SSC may connect to the payload 1553B local bus (payload–1 and payload–2 via UOP) for command/monitoring of payload. For payloads in the APM and JEM, payload communications are the same as the US LAB with coordination of the International Partners (IPs).

4.4.1.1.1 PAYLOAD EXECUTIVE PROCESSOR (PEP)

The PEP resides in the payload MDM and provides monitoring, control, and coordination of payload activities on the ISS. PEP is driven by configuration tables which provide operational data to PEP services and utilities to support payload operations. Modification of these configuration tables will change as the ISS payload complement changes. The Payload Integration Office (PIO) manages the configuration tables and the Payload Operations Integration Center (POIC) implements any changes.

There are three basic types of payload interface configurations supported by the PEP: a single payload rack, a multiple rack payload, and a multiple payload rack. In the case of multiple payload rack, the rack controller is responsible for collecting and distributing all data from/to the payloads within the rack through a single Remote Terminal (RT). The payload processor (which is considered an RT to PEP) in a single payload rack or multiple rack payload is responsible for collecting and distributing all data from/to the rack.

The following describes the payload services of the PEP that provide the user with a mechanism for obtaining or sending data/commands to the payloads. Payload services are available to the users as scheduled during the weekly planning process. The interfaces to PEP are through the C&C MDM control bus on the system side of the payload MDM and the payload local buses on the payload side. The payload local buses connects to the SSC, APS, PEHG, and payloads. The PEP services are specified in SSP 52050.

A. Procedure Execution Service

This capability, in conjunction with Timeliner, provides an on-orbit configurable capability to control payload operations based on command input or payload status feedback. This service is activated when a Timeliner Command is generated from the crew (via PCS) or ground, or upon request from the payload. Upon receipt of the command/request, the Procedure Execution Service issues a command to the Timeliner Executor identifying the User Interface Language (UIL) bundle (sequence of Timeliner User Interface Language statments), sequence, and action specified by the command. Once the bundle has been installed via an Install Bundle command, a payload can control the execution of the procedure by placing the Procedure Execution Request structure (given in Table 3.2.3.7–1 of SSP 52050) in the Payload Request location in the payload's health and status. A Procedure Execution Request is invalid if there is no sequence associated with the Sequence Identifier provided in the request. A Procedure Execution Request is unauthorized if the request (Start/Stop/Resume) does not correspond with authorization data located in PEP increment-specific configuration tables.

B. Health and Status/Safety Service

Payload health and status/safety data is the set of flight information required by the POIC to support real-time operations and analysis. It includes status parameters from the payloads and any onboard systems and subsystems for which the POIC is responsible. The payload

health and status data is required by the POIC to monitor and manage payload operations, and is available to the payload user upon its request.

Payload safety data is the set of safety-related flight data defined by the PD/PI in conjunction with the Payload Safety Review Panel (PSRP) and is required to support real-time operations and analysis. It is contained in the health and status data but is processed and monitored independent of the payload health and status data.

PEP processes on-orbit payload operations health and status data and safety data. PEP assembles a data stream of payload-specific health and status data to the POIC via the Ku–band. The payload health and status data and safety data are received by PEP via the payload local 1553B bus (LRDL). The Consultative Committee for Space Data Systems (CCSDS) downlink packet is created by the PEP from data (with a CCSDS header) provided by the payload via the RT. The downlink packets are sent to the HRFM via the HRDL for downlink. The payload safety data is sent to the C&C MDM for inclusion in the S-band downlink. The PEP also utilizes payload health and status for limit monitoring, sending parameters to the SSC for crew display, to support automated procedure execution and to support the provision of ancillary data.

Figure 4.4.1.1.1–1 illustrates the health and status bit allocation format. The subset Identifier defines a particular payload's data. PEP will use the subset Identifier to identify the length of the data and the storage area for the data. To request a PEP service (i.e., start and stop ancillary data service and low rate telemetry service, file requests, and procedure requests), the payload must place the appropriate request structure in the payload request location in the payload's health and status. The format of the payload request data is given in Table 3.2.3.7–1, Service Requests, of SSP 52050.

For the PEP to begin collecting payload health and status data and safety data, a Payload Startup Notification Command must be received by the PEP. Prior to the PEP receiving the command, the payload power and processor must be activated. For PEP to cease collecting payload health and status data and safety data, a Payload Shutdown Notification Command must be received by the PEP. These commands can be generated from the crew, ground, or Timeliner. The PEP collects a payload's health and status data and safety data at either one data reding in 10 seconds or one per second on a per RT basis as defined in the increment-specific configuration tables. The PD will input these rate and definitions via C&DH data set. The payload MDM will use the length in the word 3 of the CCSDS header to determine the actual number of messages to be collected for the health and status packet. Messages can contain up to 32, 16–bit words. This message is known as a "boxcar". For additional information regarding the PEP Health and Status Service, see Section 3.2.3.5, Health and Status, of SSP 52050.

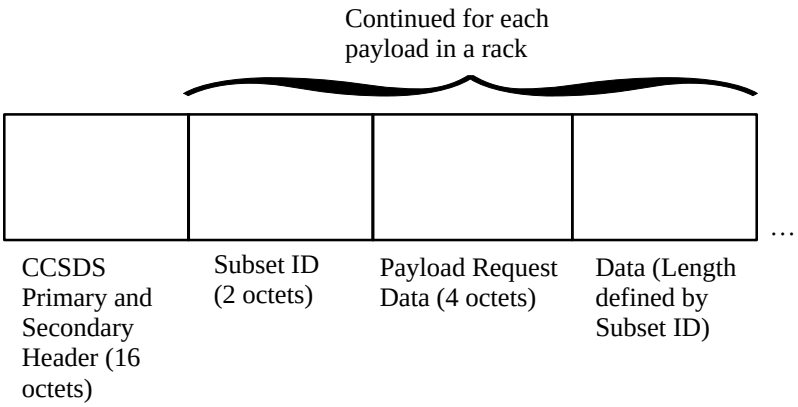

FIGURE 4.4.1.1.1–1 PAYLOAD HEALTH AND STATUS BIT ALLOCATION FORMAT

C. Solid State Mass Memory Unit (SSMMU)

The purpose of the SSMMU service has several functions. It provides a means by which payload applications can access data on the payload SSMMU. This function limits access by payload applications based on authorization data generated by the POIC. This authorization data specifies access privileges of payload applications for individual payload SSMMU files. To manage the files, the payload must place the File Request Structure (given in Table 3.2.3.7–1 of SSP 52050) in the Payload Request location in the payload's health and status. For further information regarding payload file transfer to/from the PEP, see Section 3.2.3.9, File Transfers, of SSP 52050.

Provides the POIC a means to manage files on the payload SSMMU. PEP may downlink data from identified payload SSMMU files via Ku-band telemetry upon command. PEP also responds to commands to delete files from the payload SSMMU.

Provides a non-volatile SSMMU for storage and retrieval of Timeliner bundles, files for laptops, files for payloads, log files, the PEP configuration tables, etc. in the MDM. Provides a Zone of Exclusion (ZOE) storage for Health and Safety data. ZOE is an interruption of communication to the ground through TDRSS. The SSMMU provides a formatted storage capacity of 300 Mbytes. SSMMU management transfers files to and from the payload MDM or direct to the Ku-band for downlink. The downlink data transfer rate is 1.2 Mbps, for all payloads collectively.

D. Ancillary Data Service

Ancillary data is a selected subset of core system data and other onboard generated data, including payload generated data, required to support experiment/payload analysis by users,

for use by onboard payloads during operation and for operation of onboard payloads by the crew and ground controllers. Ancillary data describes the flight environment in which the payload is operated and includes information such as temperatures, state vectors, Station configuration, and microgravity constants. Table 4.4.1.1.1–I provides a representative list of ancillary data types. The list is not exhaustive.

PEP provides ancillary data to the payload based on ancillary data sets predefined by the user via C&DH data set and the POIC. A payload may request the PEP to provide ancillary data as a one-shot transmission or on a cyclic basis of one data reading in 10 seconds or one per second per payload basis based upon the selection of the predefined ancillary data set(s). PEP accepts commands from the crew, ground, or Timeliner to initiate and terminate the cyclic downlink of ancillary data, in CCSDS packet format.

This service will be activated for a particular payload via the Start Ancillary Data Service Request. The service is terminated via a Stop Ancillary Data Service Request. To receive or terminate ancillary data, the payload must place the appropriate ancillary data service request structure in the Payload Request location in the payload's health and status.

Table 3.2.3.8–1, Ancillary Data Packet Format, of SSP 52050 illustrates the message format for Ancillary Data which is sent by the PEP to a payload. A payload can request one data set at a rate of 10 times per second per Payload Request, but the PEP will send only one data set to a payload for any given request. A data set is limited to 32 words (including the CCSDS header, ancillary data set ID, and up to 23 data words). There is a maximum of 100 data sets allowable for any payload complement.

E. Operations Control Service

The crew, ground, or Timeliner may command the PEP for all PEP system mode changes. PEP receives operations commands, provides responses to these commands, and executes the required activity. The commands are used for Emergency Rack Shutdown, Operation Shutdown, and Suspended Payload Operations, and to control the PEP modes. The modes are (1) idle and (2) normal payload operations. Idle mode is used to initialize internal PEP data and automatically transitions to normal payload operations mode.

The following defines what services or capabilities are available to the payload during each PEP mode:

(1) Idle: No POIC telemetry or payload services are provided.

(2) Normal Payload Operations: Nominal operating mode for conducting payload activities. Within this mode individual payloads are started, operated, shut down, etc. All PEP support and management functions are available.

TABLE 4.4.1.1.1–I ANCILLARY DATA TYPES (EXAMPLES)

SYSTEM	PARAMETERS
Environmental Control and Life Support System (ECLSS)	Internal Pressure Partial Pressures, O_2, CO_2, N_2 Atmosphere Composition Relative Humidity Chemical Contaminants Internal Temperatures Smoke Detection Flame Detection Avionic Air Distribution/Temperature Radioactive Doses & Instantaneous Rates
Video Configuration	Camera Status Video Switch Configuration Recorder Status Video Frame Rates Single Frame Images
Communication and Tracking	Bandwidth Utilization status Orbital Replacement Unit (ORU) Status and Performance/failures High Rate Link Utilization Status
Thermal	Coolant Inlet Temperatures Coolant Exhaust Temperatures Flow Rate Low/Moderate Temp Loop Temperature In Low/Moderate Temp Loop Temperature Out
Electrical	Rack Current Usage Supply Voltage RPCM On/Off Power Status
Vacuum System	Motor Operated Valve Open/Closed Position Manifold Pressures
Rates	Body Rate X-Axis, Y-Axis, Z-Axis
LVLH Attitude M-50	Quaternion (1-4)
State Vector	X, Y, Z-Comp of Current Position Vector X, Y, Z-Comp of Current Velocity Vector
Miscellaneous	Greenwich Mean Time (GMT) Mission Elapsed Time Station Modes Acceleration Levels Vibrations System Pumps Crew Operations/Activity Sun Vector

F. Low Rate Telemetry Service

The PEP supports the low rate downlink of payload data. The PEP accepts low rate telemetry data from payloads and sends the data to the ground via the HRDL. The Ku-band transmits the data to the ground system.

This service may be activated for a particular payload via the Start Low Rate Telemetry Request. The service is terminated via a Stop Low Rate Telemetry Request. To receive or terminate low rate data, the payload must place the appropriate low rate telemetry request structure in the Payload Request location in the payload's health and status. The PEP accepts commands from crew, ground, Timeliner, or payloads to initiate and terminate low rate service. The PEP collects a payload's low rate science data at either a one data rading in 10 seconds or one per second on a per payload basis (the payload MDM process rate is 1.0 Hz).

A Start Low Rate Telemetry Request is invalid if the requesting payload is currently being provided the Low Rate Telemetry Service. A Stop Low Rate Telemetry Request is invalid if the requesting payload is currently not being provided with Low Rate Telemetry Service.

Upon receipt of a valid Start Low Rate Telemetry Request from a payload, the Low Rate Telemetry Service starts to downlink data for a specified payload. The POIC health and status data will indicate which payload(s) is(are) currently being serviced. Payload low-rate telemetry data (its own CCSDS formatted packet) will be polled by the PEP from payload transmit subaddress # 8. The data is then downlinked via HRDL and transmitted to the ground by the Ku–band. The data is routed on the HRDL to the Ku–band entry point (High Rate Frame Multiplexer) through the APS. The transfer of low rate telemetry payload downlink data from payloads to PEP will support up to 100 kbps of payload data on an individual local bus. For additional information regarding the mechanics of the PEP Low Rate Telemetry Service, see Section 3.2.3.10, Low Rate Telemetry, of SSP 52050.

Upon receipt of a valid Stop Low Rate Telemetry Request, the Low Rate Telemetry Service assures that the downlink data is currently active for that payload and then discontinues providing the downlink data for the payload.

G. Limit Monitoring Service

The Limit Monitoring Service monitors payload and payload support system data to detect out-of-limit conditions. A Limit Monitoring response consists of initiating predefined exception processing and notifying the crew and POIC of out-of-limit conditions. Limit Monitoring processing is predefined and may consist of either providing a command to execute an automated sequence, providing a command to the payload, providing notification to SSC or payload laptops, and/or notifying the C&C MDM of a Limit Monitoring event.

The PEP must receive the Payload Startup Notification Command indicating the payload is active before Limit Monitoring Service is initiated.

Up to 250 data items per payload MDM (i.e., payload data items, core system data items, APS data items, etc.) are allowed for limit checking, with two exception levels for each data item. A level one exception triggers a C&C MDM notification, SSC notification, and command or activation of a Timeliner sequence. A level two exception initiates only a command or Timeliner sequence with no notification sent to the C&C MDM or SSC.

H. Payload Commanding Service

A payload command can be sent by the crew, ground, or Timeliner and is routed through PEP for an initial verification before the command is passed to the payload. The command will contain within the primary CCSDS header the appropriate Application Process ID (APID) corresponding to the RT being commanded. PEP makes no interpretation of the command other than to distinguish it as a non-PEP command so that verifications can be conducted before the command is forwarded.

One command can be no more that 64 16-bit words (command through the OIU is limited to 62 words) including the CCSDS header. Payload commands destined for payloads located on the local bus are transferred to the RT Commanding Subaddress at a maximum rate of 10 commands per second. The payload MDM can process up to 10 commands per second from the C&C MDM (maximum number of uplink command is 8 commands per second), or one command per second from each SSC (total of five SSC on the payload MDM local bus).

I. Broadcast

(3) Time: payload MDM will broadcast the station time to payloads for reference at 1.0 Hz rate which is accurate to 2.5 ms, referenced to the GPS system.

(4) Broadcast ancillary data: The payload MDM will broadcast 64 words of Broadcast Ancillary data (core data) per 100 ms up to 100 sets. Each set includes a CCSDS header, 1.0-Hz data segment (once per second) and 0.1-Hz data segment (once every 10 seconds).

(5) Broadcast sync: The payload MDM broadcasts a Broadcast sync with data message on all lower level 1553B buses every 100 ms.

J. File Transfer

Transfers of bulk file data between a payload RT and the PEP are initiated through the PEP Service Request mechanism. The mechanism for causing the PEP Service Request to be issued by the payload RT is determined by the developer of each ISPR. For example, the

EXPRESS developers have defined a Rack Interface Controller (RIC) command that causes the RIC to request a PEP file transfer.

The transfer of file data in either direction (PEP to RT, or RT to PEP) requires a degree of handshaking between the source and destination to ensure completeness and accuracy. To achieve a complete and accurate data transfer, the file data will be passed in 256 word blocks that are enclosed in nine separate 32–word messages (288 words). Also included in the 288 words is CCSDS header information and checksum, the total file length in bytes, the number of words (of the 256 words) in the data field, and a Block Number.

For additional information on File Transfers, see SSP 52050, Section 3.2.3.9.

4.4.1.1.2 TIMELINER

Timeliner provides the User Interface Language (UIL) function to control payload operations via sequences and commands. UIL procedures may be operated automatically or under close monitoring and control of users.

The implementation of UIL has two parts, the Compiler and Executor. The UIL Compiler, located in the POIC, prepares procedures for execution. A “raw” script is read in as American Standard Code for Information Interchange (ASCII) data. The statements are parsed, data and command references resolved, and error messages are issued if necessary. The output of the Compiler is a listing file, a file of executable data, and a system data reference file.

The UIL Executor, located in the payload MDM, executes the procedure embodied in a compiled UIL script. Up to 500 entries of UIL sequences or bundles may be executed simultaneously. Within each bundle, each sequence is treated as a logically independent “string” or “thread” of execution. The Executor reads and responds to a set of real-time commands that allow a user to control script execution and outputs its status for use in UIL monitoring.

4.4.1.2 PORTABLE COMPUTER SYSTEM (PCS)

The ISS Vehicle team refers to the laptop with Solairs operating system for control of the Space Station uses the Portable Computer System (PCS). The Space System Computer (SSC) is the MOD version for crew use. Another version is the dedicated Payload Laptop. The SSC will be used except when the other is intended for general purpose.

The PCS will be available at lab activation to support MCDS-link and Payload Operations Control Center (POCC). The PCS will perform the following functions: C&C of core systems, C&C of payloads, C&W notification and display, display of plans and procedures. Other functions include: Operations and Utilization (O&U) support functions—Inventory

Management System (IMS), payload applications, crew applications, diagnostic equipment, and office automation will be supported.

The SSC provides commanding, monitoring, and visual annunciation for crew interface to the payloads as well as the Space Station. The SSC also provides a crew interface to operate Commercial-off-the-Shelf (COTS) applications, such as a word processor, in a stand-alone fashion. The SSC includes peripherals (keyboard, cursor control device, display device) and a 1553B and/or Ethernet data interface. The SSC can interface with the payload either via direct 1553B, payload MDM 1553B local bus, which is considered a LRDL, or Ethernet system, which is considered a MRDL. These components allow for the acquisition, processing, and manipulation of information, and support the control, monitoring, logistics, scheduling, and other tasks or functions required for payload operations. The 1553B payload local buses provide two portable computer ports in the USL via UOPs.

4.4.1.2.1 DISPLAYS

Displays provide the capability to monitor payload health and status data, system data, C&W and fault summary, and time. Displays also provide the capability to command payloads. All payload displays are required to comply with the display format requirements given in SSP 50005.

4.4.1.2.2 SSC OPERATIONAL GUIDELINES/GROUNDRULES

SSC primary mission is vehicle C&C. Other missions must be handled in a way that does not compromise the primary mission. The SSC will not automatically send critical or hazardous commands. Redundant SSCs must be available for time-critical operations. C&W support will be provided in every occupied volume.

4.4.1.2.3 PAYLOAD APPLICATION SOFTWARE (PAS)

PAS is payload-unique software resident in the SSC developed to perform specific data acquisition, data reduction, data processing, data display, and data manipulation requirements for the complement of payloads on a given increment. The program via PD requirements and funding provides PAS. The SSC uses the Program Unique Identifiers (PUI) for displays. See Section 4.4.1.5.1.4 for PUI definition.

4.4.1.2.4 PORTABLE COMPUTER SYSTEM COMMAND AND DATA SOFTWARE (PCSCDS) OVERVIEW

The primary purpose of the SSCs is to serve as the crew's tool for command and control of ISS. The PCSCDS Computer Software Configuration Item (CSCI) supports command and control while connected to a payload, C&C, or Node 1 MDM.

Within the SSC workstation, the PCSCDS CSCI operates with the operating system and display software to display data to the crew, and to accept commands from the crew. It handles all file transfers and memory loads; user applications need not be aware of the complex file transfer protocols.

See Figure 4.4.1.2.4–1 for a more detailed view of the PCSCDS, showing its external data interfaces. (There are some differences between the MDMs; this figure shows the interfaces to the C&C and payload MDMs.)

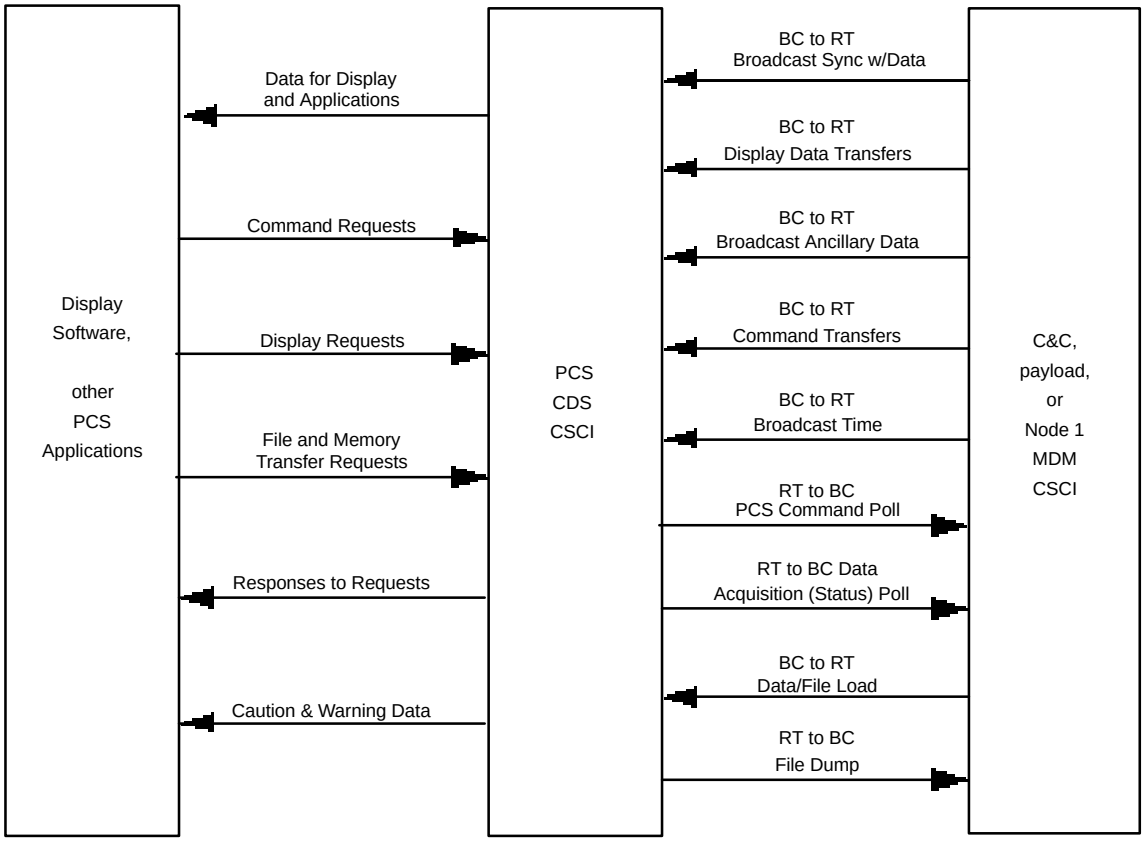

FIGURE 4.4.1.2.4–1 PCSCDS EXTERNAL INTERFACES

The current SSC baseline does not include any connections between SSC workstations. Any communication between workstations is via the 1553B bus and attached MDM, or by physically carrying media from one workstation to another.

The current SSC baseline does not include any capability for the SSC workstations to be commanded remotely. Any and all SSC operations, e.g., file transfers, must be initiated by a crewmember or application at the workstation in question.

The primary SSC operating system is Solaris 2.4 or greater. All displays or applications that are using PCSCDS facilities must operate under Solaris. The SSC also supports Microsoft Windows programs, running under Windows NT (4.0 or higher) or stand-alone. Currently there is no facility for Windows programs to use the 1553B interfaces.

All PCSCDS code is written in ANSI C. All interfaces will also be provided in ANSI C.

A SSC workstation can only send one command per second.

All hazardous commands are to be designed to require manual crew interaction. Application programs will not create hazardous commands.

The total data rate for data to a SSC workstation is 640, 16-bit words per second. Minus the overhead, the maximum effective rate is about 540, 16-bit words per second. Each display or application that requests a set of data items (data display request) reduces that number by two words plus the number of data words requested.

The sample rate for data transfers to a SSC workstation is one sample per second.

The maximum effective transfer rate for data between a SSC workstation and the payload MDM is 5120 bytes/sec. This is a maximum number for one file and one workstation; if multiple files are transferred simultaneously the number of files divides the effective rate. The rate of files transferred is the transaction rate. Multiple simultaneous file transfers apportion the transfer rate to each transaction.

A single SSC workstation can request only one file from the attached MDM at a time. Any other workstation can simultaneously request files as well, but the effective data transfer rate will decrease accordingly.

The payload MDM, as the bus controller, restricts the file request to one at a time.

The SSC has an ability to initiate file transfers from the C&C MDM to the payload MDM.

There is a set of commands to query the attached MDM's hard disk, the following is a partial list: get a directory listing, create a directory, delete a file, rename a file, etc.

Timeliner Activity Records provides the SSC as a series of data load commands and will have an interface in the File and Memory Transfer (FMT) sections.

For additional information regarding the SSC design and operation, see SSP 52052.

4.4.1.3 PAYLOAD ETHERNET HUB/GATEWAY (PEHG)

The two ISS payload Medium Rate Data Links (MRDL) implement the IEEE Ethernet Local Area Network Data Bus. In particular the ISO/IEC 8802–3 (1996) implementation. The particular form used is known as 10 Base T. This is a Hub and Spoke topology as apossed to a single linear coax cable. The Hub is known as a concentrator. The spokes are 100Ω twisted shielded pairs, one from the Hub to the Payload and one from the Payload to the Hub. The Hub simulates the bus. In ISS the Hubs are Payload Ethernet Hub/Gateway (PEHG) and Payload Ethernet Bridge Hub (PEHB). The PEHB is in the EXPRESS racks.

The media access control (MAC) protocol (rules for operation) is Carrier Sense Media Access and Collision Detection (CSMA/CD). A potential user of Ethernet listens to see if the bus is available. If the bus is quite, the payload begins to transmit data. While it begins to transmit, it listens to see if another payload making the same decision transmit at the same time corrupts its data. This is collision detection. If that happens, both transmit a collision symbols, then both stop transmitting and wait to attempt it again when it is quit. While waiting a third payload may use the bus. If the bus has all long data message or all short, it can get stuck colliding more than moving data. For this reason each LAN may actually carry 4 to 5 Megabits per second, even though the signaling rate is 10 Megabits per second.

The gateway function is a feature to convert the Ethernet data field to a HRDL data field and forward to the HRFM through the APS. The payload uses the gateway by addressing the data to the gateway.

The bridge function is a feature to convert the Ethernet data field to a HRDL data field and forward to the HRFM through the APS. The payload uses the gateway by addressing the data to the gateway.

The bridge function isolates Ethernet data that is inside of the EXPRESS rack and not meant to go to the MRDL from getting on the MRDL. It also isolates MRDL data not meant for the internal EXPRESS Ethernet from getting into the EXPRESS rack.

The payloads may interface to the MRDL at the UIP, UOP and EXPRESS drawers.

The PEHG is controlled via commands over the Payload LRDL.

4.4.1.4 AUTOMATED PAYLOAD SWITCH

The payload HRDL data is routed via the APS. The APS takes the HRDL signal, providing an optical to electrical conversion, an electrical crossbar switch mechanism for signal routing and a clock regenerative electrical to optical conversion back to a HRDL signal.

The switching configuration is controlled via commands over the Payload LRDL.

4.4.1.5 PAYLOAD DATA INTERFACES

The C&DH data interfaces provided to a USL ISPR location include the MIL-STD-1553B, HRDL, and MRDL. A summary of the data interface characteristics is given in Table 4.4.1.5–I.

TABLE 4.4.1.5–I C&DH PAYLOAD INTERFACE CHARACTERISTICS

C&DH PAYLOAD INTERFACE CHARACTERISTICS							
ISS Program Name	Parent Industry Data Link	Data Rate	Throughput Rate	Baud Rate	Signaling Rate	Encoding Scheme	Media Access
LRDL	MIL–STD–1553B, Verified to MIL–HDB–1553B.	1 Mbps	750 kbps the reduction from 1Mbps is doe to required framing gaps and synchronization and parity bits.	1 Mbps	2 MHz	Bi–Phase–L	Scheduled
MRDL	ISO/IEC 8802–3 (IEEE 802.3 or Ethernet) 10 Base T.	10 Mbps	0 to 8 Mbps depends on the mix of packets and is statistical in nature.	10 Mbps	20 MHz	Bi–Phase–L	Non–Deterministic CSMA/CD
HRDL	FDDI	100 Mbps	100 Mbps limited by HRFM to 50 or less	125 Mbps	62.5 MHz (max)	FDDI TAXI { 4 bit/ 5 bit NRZ–I}	Scheduled through the APS

Data Rate	The rate the data is transmitted
Throughput Rate	The mean delivered data rate
Baud Rate	The rate the “symbols” for encoding are transmitted
Signaling Rate	The rate the “signals” that form the “symbols” are transmitted. {Ones/Zeros or On/OFF or Light/Dark}

4.4.1.5.1 CCSDS PROTOCOL DESCRIPTION

CCSDS based protocols are used for the transfer of commands and data between payload processors and the ground. CCSDS packets contain a Primary CCSDS Header, a Secondary CCSDS Header, user data, and an optional checkword. The first three words of the CCSDS packet are the Primary Header. Words 4 through 8 are the Secondary Header. The CCSDS Primary Header has a common format for all packets. The last two words in the Secondary Header (Packet ID) have different formats depending on the use of the packet. Data in a CCSDS packet following the Secondary Header is identified as user data. The specific format for user data is a function of parameters in the packet’s Secondary Header. The last word in the CCSDS packet is a checkword that provides a data integrity check of the contents of the packet. The presence of the checkword is optional and is controlled by a parameter in the Secondary Header. The use of the checkword is required for all command packets. However a CCSDS packet is not

required for payload-to-payload communication via the MRDL and HRDL. DU Band ICD SSP 41158 and S–band ICD, SSP 41154 define the type of sampling allowed to be processed in the Enhanced Huntsville Operations Support Center (HOSC) System.

Definition of the fields in the CCSDS primary and secondary header is contained in Section 3.3.2.1.1, CCSDS Protocol Definition, of SSP 41175–2, and further tailored in Appendix D, Summary of CCSDS Secondary Header tailoring, of SSP 52050.

4.4.1.5.1.1 CCSDS APPLICATION PROCESS IDENTIFIER (APID) MANAGEMENT

The Application Process Identifier (APID) is a parameter in the Primary CCSDS Header of all command and data transactions between the source and the destination. The CCSDS header formats for both commands and data are described in the previous section.

In the CCSDS standard, the APID represents a source/destination pair and the logical path between the source and the destination. Onboard processing maintains the logical physical relationship between the APID and the path to the destination.

The APID is 11 bits in length, which provides for a possible set of 2,048 APIDs. APID values above 2,031 are reserved by the CCSDS standard. Also, the value of zero has been reserved for ground processing. ISS has adopted an APID extension philosophy which involves the use of the Type bit in the Primary Header as an extender to the APIDs. The two sets of APIDs are labeled core APIDs (Type=0) and payload APIDs (Type=1). In general, core APIDs are used for core or system functions, and payload APIDs are reserved for payload functions. The ISS program assigns the APID. Destinations are generally identified logically rather than physically.

The master documentation of the APID assignments is in the Mission Build Facility (MBF) Standard Out documentation. In the documentation, each APID is identified by the source and destination.

APIDs for a payload or subrack payload are assigned by the Payload Engineering Integration function upon request from the payload or subrack payload developer or rack integrator, and are recorded in the integrated rack unique software ICD.

4.4.1.5.1.2 DATA TYPES

For definition of data types refer to Section 3.2.1 of SSP 52050.

4.4.1.5.1.3 WORD ALIGNMENT

The ISS onboard processing is built upon a MIL-STD 1553B bus architecture with all bus transactions based on the transfer of 16-bit words. Whenever the size in bits of the data types identified in the above reference is not an integer multiple of 16 bits, then either:

A. Multiple data items will be aggregated into a larger bit-contiguous group, with the possible addition of bits of no consequence.

B. Bits of no consequence will be aggregated with a single data item for the purpose of creating data aggregates whose size is an integer multiple of 16 bits.

4.4.1.5.1.3.1 WORD AND BYTE ORDERING

For telemetry data downlinked from the payload to the United States Ground Segment (USGS), the following rules apply to the word and byte order of the data.

A. For parameters which are larger than one word (referred to as multiple precision data in MIL-STD 1553B), the most significant word will be transmitted first, followed by the next most significant word and so forth until the least significant word is the last word transmitted.

B. The transmission order of the octets (bytes - contiguous 8-bit groups) within each word will be most significant octet (byte) followed by least significant octet (byte).

C. For data contained in uplink command packets, the word and octet (byte) ordering will be the ordering desired by the onboard destination. This approach is intended to minimize processing overhead for the resource constrained onboard processors.

4.4.1.5.1.4 PROGRAM UNIQUE IDENTIFIERS

For a definition of PUI structure, see Section 3.3.1, Program Unique Identifiers, of D684–10056–01.

4.4.1.5.2 PAYLOAD 1553B LOCAL BUS

The payload 1553B local bus consists of the electrical twisted-shielded pair cabling and connectors interconnecting the payload MDM to its RTs (i.e., ISPR location). The payload 1553B local bus provides the JEM ISPRs, USL ISPRs, APM ISPRs, and external payload locations with a command/control, timing, and data distribution interface as well as a limited low rate telemetry interface for U.S./CSA payloads.

Time is broadcast from the payload MDM via the payload 1553B local bus to its RTs using an RT receiver. The format of the Broadcast Time will be as given in Table 3.3.2.2.2.2–1, Broadcast Time Message 1 Content Format, SSP 41175–2.

An RT can communicate with the payload MDM via the Payload 1553B bus by meeting the electrical, signal, and protocol requirements of MIL-STD-1553B. All communication between the RTs and the payload MDM are via CCSDS packets utilizing the 1553B protocol and controlled by the payload MDM.

4.4.1.5.2.1 COMMUNICATION FORMAT ON THE PAYLOAD 1553B BUS

The PEP will communicate with RTs located on the local bus through the use of subaddresses that have been allocated to particular PEP functions. The software that provides the RT interface for the payload will be required to package data to be sent to the PEP in the correct format and place it on the correct subaddress for acquisition by the PEP. Also, the RT interface software for the payload will be required to retrieve data sent out by the PEP from the correct subaddress and distribute it to the payload. Subaddress assignments are shown in Table 3.2.3.2.1.4–1, Subaddress Assignments, SSP 52050.

4.4.1.5.2.2 ELECTRICAL CHARACTERISTICS

The electrical characteristics of the MIL-STD-1553B bus media are as specified in MIL-STD-1553B.

4.4.1.5.3 MEDIUM RATE DATA LINK

The Station payload MRDL includes two isolated IEEE 802.3 10 BASE-T Ethernet LANs. Each payload has one LAN interface to each of the LANs, and both LANs operate the same functions such as payload-to-payload communication and downlink data via the HRDL. These two LANs are not redundant to each other (LAN1 extends into the centrifuge module; LAN2 does not. LAN2 extends into the JEM and APM; LAN1 does not). The downlink data must be in CCSDS packet format encapsulated within the 802.3 format with a maximum of 1,500 bytes of data including the CCSDS header but not including the 802.3 header.

The PEHG output data rate is selectable from 0.5 Mbps to 10 Mbps in 0.5-Mbps increment. The MRDL data must meet the IEEE 802.3 overhead, with a minimum message length of 118 bytes and a maximum message length of 1,518 bytes. These numbers include 18 bytes of overhead that contain 6 bytes Destination address, 6 bytes of Source address, 2 bytes Length, and 4 bytes of Frame Check Sequence (FCS) (excluding 7 bytes preamble and 1 byte Start Frame Delimiter).

When the PEHG output is set below 10 Mbps, it may be possible to overflow the gateway buffer memory. When this occurs, the message will be discarded by the gateway and be lost. The PEHG gateway provides the Buffer Overflow Message and Flow Control Message to prevent or limit the amount of buffer overflows and user data losses. The Buffer Overflow Message notifies the sending payload connected to the LAN that its message caused a buffer overflow and was discarded, and it uses time on the LAN preventing other payload from transferring data to the

gateway. The Flow Control message is a broadcast message with a length of up to 1,518 bytes (including IEEE 802.3 message overhead). This message can be disabled and enabled via commands from the payload MDM via the 1553B local bus to the PEHG.

4.4.1.5.3.1 ELECTRICAL CHARACTERISTICS

The electrical characteristics of the MRDL media are as specified in ISO/IEC 8802-3 (IEEE 802.3 Standards), Information Technology - Local and Metropolitan Area Networks.

4.4.1.5.4 HIGH RATE DATA LINK

High rate data routing is accomplished through HRDL attached to the APS for payloads in the USL, JEM, APM, and the attached payload locations. Each APS provides the capability to route data between payloads on board and between payloads and the Ku-band downlink. HRDL is capable of transporting up to 100 Mbps of data. The APS switches are configured by the payload MDM to route user data. Routing of high rate telemetry data to the Ku-band HRFM requires the data to be formatted in CCSDS packets or CCSDS bitstream and transferred in a manner which meets the HRFM digital input specifications per SSP 41158, Ku–band Space to Ground ICD and SSP 50184, HRDL Spec.

4.4.1.5.4.1 ELECTRICAL CHARACTERISTICS

The electrical characteristics of the HRDL fiber optics media are compliant with the requirements of SSQ 21654.

4.4.1.5.5 JEM C&DH PAYLOAD SUPPORT ARCHITECTURE FOR PRESSURIZED PAYLOADS

(TBD #5)

4.4.1.5.6 APM DATA MANAGEMENT SYSTEM PAYLOAD SUPPORT ARCHITECTURE FOR PRESSURIZED PAYLOADS

(TBD #6)

4.4.1.5.7 CAM C&DH PAYLOAD SUPPORT ARCHITECTURE FOR PRESSURIZED PAYLOADS

(TBD #7)

4.4.1.5.8 MPLM INTERFACE

The MPLM is connected either to the Internal MDM or directly to the OIU (while it is in the orbiter payload bay). Command and status data interfaces exist for both connection conditions. Specifics of the interface are defined in SSP 42007 for OIU and SSP 52050 when the MPLM is connected to the Station.

Commands to the MPLM will be available in the Mission Data Base. For commanding of the MPLM while it is an RT of the OIU, commands may be stored in the orbiter (GPC) or sent via the uplink. When commands are sent to the MPLM in the payload bay, the command message must identify the appropriate routing code for the MPLM.

When sending a command to the MPLM in the orbiter payload bay, MCC-H will use the routing code such as APID and PUI for OIU use that identifies the MPLM as a destination.

Health and status data from the MPLM is contained in two 32-word messages received cyclically at 10 Hz from the MPLM. One of the messages contains MPLM MDM data. The other message contains refrigerator/freezer data. When the MPLM is an RT to the Internal MDM, this data is transferred to the C&C MDM Current Value Table (CVT) where it is available for operator retrieval. When the MPLM is connected to the OIU, these messages are provided to the OIU for inclusion in OIU telemetry. After the MPLM payload (refrigerator/freezer) been relocated in the USL, it will interface with the payload MDM.

4.4.1.6 NCS-TO-OIU TELEMETRY

The payload installed in the MPLM may use this capability. The NCS in the Primary Node1 MDM transmits data to the Orbiter Interface Unit (OIU) when the interface has been activated by a command. The telemetry transmission to OIU continues until the NCS is commanded to terminate the transmission at orbiter departure. The OIU interface activation command specifies the bus over which the communication is to occur and also causes the NCS to begin polling for the presence of a PCS on the same bus. The telemetry bandwidth between NCS and the OIU is 96 words per 100-ms frame.

The NCS-to-OIU composite frame consists of 100 x 96 word CCSDS packets. NCS supports one OIU composite telemetry format in EEPROM. New formats or modifications to the existing format can be made via Data Load. The data within a packet is generated at the same time; i.e., it is homogeneous. One packet is sent to the OIU every 100 ms. A complete major frame is transmitted every 10 seconds.

The NCS telemetry data sent to the OIU is combined with OIU-originated data and/or with telemetry data originating from an MPLM originating in the orbiter cargo bay. The Orbiter Composite Frame structure is specified in **(TBD #7)**.

4.4.1.7 COMMAND UPLINKS

Commands to software on board the Station can originate from a number of command sources on the ground and on board the ISS. In order for these commands to be acted upon, or executed by software in a destination processor, the command must be delivered to the destination processor. The destination processor can be any MDM or ISPR controller, international processor, or in some cases, firmware controllers. Once a command reaches its destination, the command is executed by application software unique to the command.

The onboard ISS data processing architecture involves the use of a distributed set of processors connected by 1553 data busses. Each processor in the data processing architecture can be the destination of a command. In order for a command to be routed from its source to the command's destination, a command may need to be handled, or routed, by several of these processors before the command can reach its destination.

The CCSDS protocol is used for all commands that must be routed to a processor for execution. Information contained in the CCSDS headers of a command is used by onboard command processing such as C&C MDM and PL MDM to determine the routing of a command. At each step in the routing of a command, validation checks are performed to ensure that the command can be sent to the next point in its routing. Also, each processor that handles a command provides a command response that indicates success or failure of the command validation. The command responses (and the commands) are recorded to provide a history of the command activity.

In general, the CCSDS destination of a command is an MDM or ISPR controller, an International Partner processor, or in some cases, a firmware controller. This set of destinations is referred to as CCSDS endpoints. Most firmware controllers are not CCSDS destinations. Instead, the processor (MDM or IP computer) that is bus controller for the firmware controller is the CCSDS destination of the firmware controller command. When the CCSDS formatted command is received by the destination processor, application software in the destination processor formats the appropriate 1553 bus message containing the firmware controller command derived from the CCSDS formatted command it received.

Two types of commands are utilized on board for the payload - Standard commands and File Transfer commands. Standard commands are used to instruct or command a function at the payload. File Transfer commands are used to transfer data from the source to the destination. Both types of commands utilize the CCSDS protocol. Both types require the same functionality in an MDM to route the command to its destination.

Standard commands can be up to 64 16-bit words in length (62 words for a command that will be sent via the OIU interface) and are transferred between processors on board the Station using standard command transactions on the 1553 data busses. A Standard command transaction is defined as two 1553 messages (a 1553 message is 32 words). File Transfer command transactions are 288 words long (nine 1553 messages). File Transfer commands to USOS

system are up to 274 words long (Payload will receive 288 words with maximum of 256 data words and 18 overhead; the rest are not used by payload) and use the 9 1553B message transfer mechanisms. The actual length of a command is identified by parameters in the command's CCSDS header.

All commands that can be received by the Station as CCSDS formatted commands will be identified in the Mission Data Base (MDB) associated with the MBF. These commands will be available in instantiated form (parameter values filled in for a particular function) for use by a command source. Some commands will also be available as template commands (no parameter values) that will need parameter values inserted at the command source. When command templates are used, MCC-H will have software that will validate that the insertion of the parameter values is correct.

The instantiated commands from the command data base will not contain some of the parameters required in the CCSDS header (APID, Sequence Count, Time, Checksum). These commands from the MBF will be referenced in the data base using the logical endpoint ID (the parameter used is the Logical Data Path (LDP) _ID contained in the CCSDS Secondary Header of all commands). The APID values for use in commands originating from MCC-H will be indexed by LDP_ID. Thus, if the LDP_ID of the command is known, the command source can select the APID to use for the command. When a command is prepared for execution, the correct sequence count and time information will also need to be added to the command prior to transmission of the command.

The following requirements identify the necessary processing of a command instance (or template) by MCC-H prior to transmission of a command.

A. MCC-H will insert the APID into the command header that represents MCC-H to the destination identified by the LDP_ID in the command's Secondary Header.

B. MCC-H will insert a value of sequence count into the command header that is monotonically increasing for each APID with each command transmitted.

C. MCC-H will calculate and insert a time value and time ID value into the command's Secondary Header according to the requirements in Section 4.4.1.7.2 for a real-time command or the requirement in Section 4.4.1.7.3 for a time-tagged command.

D. All commands from MCC-H will either be real-time commands subject to time authentication or time-tagged commands. (Time ID must be either '01'B or '10'B.)

E. If the length of a command packet is less than 24 16-bit words, ground processing will insert fill words (zeroes) between the User data and the checkword of the command so that the total command packet length is 24 words and update the packet length parameter in the CCSDS header to reflect the changed packet size.

F. After the APID, Packet Sequence Count, and time information have been inserted into the command, MCC-H will compute the command checksum and insert the checksum into the command's checksum word.

There will be some cases where the use of an instantiated command is not practical and a command template will be used to generate a command. When a command template is used, the following requirements (in addition to A through F above) apply:

G. MCC-H will validate that each template parameter is within the limits defined by the MBF.

H. MCC-H will validate the parameters inserted into a command template prior to transmission of the resultant command.

4.4.1.7.1 STANDARD COMMAND FORMAT

All commands uplinked from the ground utilize the CCSDS protocol. Commands contain a CCSDS Primary Header and Secondary Header (refer to SSP 52050 and SSP 41175–2). Information in the header of the command is used to route the command to its final destination and to provide validation checks of the command during the delivery process. All commands also utilize a checkword at the end of the command data as shown in the figure. The checkword is formed by adding the set of 16-bit words in the command packet starting with the first word of the CCSDS header to but not including the checkword (overflow is ignored). Following the secondary header is a two-word reserved area used to indicate the Station modes that the command can be executed in. Remaining words between the Legal Station Modes (LSM) and the checkword are used for command-specific data.

The fields in the Primary and Secondary Headers are described in paragraph 4.4.1.5.1 of this document. Portions of words 7 and 8 of the Command CCSDS header are different depending on the destination of the command. Commands to International Processor destinations will use a format in words 7 and 8 unique to each IP. The Element ID in word 7 identifies whether the command format is for the USOS or an International Partner processor. Also, the use of the Command ID and the Function Code in word 8 of the header varies in the USOS. However, command templates and instantiated commands available via the MBF will contain the correct format and parameter values for the command.

The User data in the body of the packet is unique to each command. The format of the User data is defined by the receiver of the command. If the total packet length, including the headers, User data, and checkword is less than 24 words, ground processing will need to add fill words sufficient to make the total length of the command 24 words.

4.4.1.7.2 TIME AUTHENTICATION

Time authentication on board involves a comparison of the time in the command's CCSDS Secondary Header (unsegmented CCSDS time format - see paragraph 4.5.2.11 of this document) with the current time on board. If the time in the command's header is not within 1 min **[TBC]** of current onboard time, then time authentication fails and the command is rejected (see section on command paragraph 4.4.1.7.5 responses). This test is to ensure that the command is

authentic; that is, the command is not a recording of a previous command. All commands, with the exception of a time-tagged command, are required to utilize command authentication.

Time authentication is performed by the C&C MDM. The value of time in the CCSDS Secondary Header time field must be relative to the time value in the MDM performing the time authentication command validation checks.

The value of time in CCSDS unsegmented time format is present in all telemetry data packets. This value of time is also available for downlink as a separate data parameter. The time field in uplinked command packets must be relative to this clock.

When the C&C MDM receives a command, the onboard time will be controlled to a selected external time (either Russian Service Module time or U.S. Global Positioning System time) the C&C MDM clock value will be based on the MDM default time. This time will change only after the operators have successfully commanded a Sync to External time (Russian time).

A. For all real-time commands sent from the Ground Segment, the ground processing will insert a CCSDS unsegmented value into the Secondary Header of the command.

B. The time value inserted into a sent command's Secondary Header will contain a time value of command transmission in the current onboard time base.

Status data associated with time authentication includes:

(1) CCSDS unsegmented time value in telemetry headers

(2) Time authentication command rejection code in command response data

(3) Value of time available for inclusion in downlink telemetry formats

4.4.1.7.3 TIME-TAGGED COMMANDS

A time-tagged command capability is provided in C&C. This allows ground operators to uplink commands that are stored and executed at a later time. A time-tagged command is identified by a value of '10'B in the Time ID field of the CCSDS header. Time-tagged commands are dispatched from the queue when the time of execution of a command is reached. Time-tagged commands are dispatched one per second. If multiple commands with the same time tag are in the queue, the commands will be dispatched one per second, in the order that they were received.

In the C&C MDM, there are three time-tagged command queues. There is a time-tagged command queue used for general purpose time-tagged commands (size is 200 commands). There are also two additional time-tagged command queues. These are reserved for time-tagged commands associated with S-Band and Ku-Band control (each may contain up to 300 commands). Incoming time-tagged commands are routed to and stored in the general purpose

time-tagged command queue unless they are identified to be placed in the S-Band or Ku-Command time-tagged command queues.

Capability is also provided to load a time-tagged command queue from a file on the C&C MDM disk. No reserved storage is provided on the disk. Commands loaded from a file will be added to the commands currently in the queue. An operator command is provided to load the queue from the disk file. Commands in the disk file must conform to the format of the time-tagged queue in memory.

4.4.1.7.3.1 TIME-TAGGED COMMANDS - REQUIREMENTS

A. Time-tagged commands will have a value of ‘10’B in the CCSDS header Time ID field.

B. The time field in the CCSDS Secondary Header of a time-tagged command will contain the desired time of execution of the command in CCSDS unsegmented time format (relative to GPS epoch).

C. The time field in a time-tagged command will contain a desired time of execution relative to the current C&C MDM Local Reference Clock value.

D. A file of time-tagged commands to be placed into a time-tagged command queue will conform to the following format **[TBS]**.

E. Status data for each time-tagged command queue will include the number of commands in the queue and the time of next scheduled command dispatch.

4.4.1.7.4 COMMAND LOGS

A command logging capability is provided in the C&C MDMs that is used to store a history of command activities. All commands received from onboard sources are logged by the C&C MDM. All command responses are also logged. This includes command responses generated in the C&C MDM and command responses received in cyclic data from lower tier MDMs such as PL MDM.

Commands received from ground control centers sent via MCC-H (identified by APID in the command) are not logged. MCC-H will log all commands it sends (or routes) regardless of the path that the command is sent on. Since all command responses are logged on board and the information in a command response uniquely identifies the command, the command response log will serve to identify commands received from MCC-H.

In the C&C MDM there will be three logs - an Onboard Sources Command Log, a Standard Command Response Log, and a File Transfer Load Command Response Log. These logs are maintained on the C&C MDM disk. Status data from each log includes the time of the last entry and an index or pointer indicating the offset in the file of the last entry.

The Onboard Sources Command Log contains a record of all standard commands received from onboard command. The file is a circular log. The current entry in the log is identified by a pointer value in the downlink. Each entry contains a 4-byte time tag (LSB=1 second) in CCSDS unsegmented time format (time since GPS epoch) that represents the value of the C&C MDM clock at the beginning of the processing frame in which the command was received by the C&C MDM and the 64 words of the command. The Onboard Sources Command Log is a 2-megabyte file. The log may be accessed by MCC-H using file dump capability.

The Standard Command Response Log and the File Transfer Load Response Log have the same formats. Each entry in a response log contains the C&C MDM time at the beginning of the frame that the response was received (two words), a three-word command response (see Section 4.4.1.7.5) for the three-word format), and one word identifying the origin of the command response). The response logs are each 0.5 **[TBC]** megabyte files. Command responses to Standard commands are logged in the Standard Command Response Log. Command responses to File Transfer commands are logged in the Data Load Command Response Log. Each log is a circular log, with a pointer to the current entry in downlink.

4.4.1.7.4.1 COMMAND LOGS - REQUIREMENTS

A. MCC-H will maintain a log of all commands sent or routed to the onboard systems from MCC-H.

B. The C&C MDM will provide status of each command and command response log in cyclic telemetry.

C. The C&C MDM will make available (via data or file dump) the command logs containing commands and command responses.

4.4.1.7.5 COMMAND RESPONSE

Command responses are generated at every node or routing node that a command passes through, including the destination (MDM level) processor. This includes the C&C MDM, a routing MDM, and the destination MDM. Command responses are also received from all International Partner processors except for the APM MMC. Command responses from APM MMC are unique CCSDS packets that may be downlinked in the Housekeeping II position of the S-Band high rate telemetry. The command response format is a three-word format shown in Figure 4.4.1.7.5–1. The first two words of the command response are the first two words of the Primary CCSDS Header of the command. The third word of the command response contains a code indicating success (zero) or failure of the command validation. A failure response indicates the FIRST reason found for failure of command validation.

Version #	Typ	Sec Hdr Flg	Application Process ID
Seq Flgs	Packet Sequence Count		
Command Response Code			

FIGURE 4.4.1.7.5–1 COMMAND RESPONSE FORMAT

The command responses are logged in the command response logs described in Section 4.4.1.7.4 and is the basis for command response data included in telemetry. Command responses from C&C or lower tier MDMs either indicate success or failure of the command delivery and will be reported in the next 100-ms processing frame after the command is received. A command response is always generated for every command received.

Command response codes less than 50 are reserved for C&DH command responses. Each C&DH command response code corresponds to a transfer layer command validation test.

Command response codes greater than 50 can be used by applications as long as the command response can be returned in the next 100-ms processing frame.

Command responses are sent to the ground in the command response telemetry packet. The command response telemetry packet is a CCSDS data packet. The format ID in the packet header will be five indicating a command response data packet. The command response packet is an on-demand packet that preempts (at the highest priority) the telemetry packet scheduled in the Housekeeping II packet position. The command response packet is sent only if there is new command rejection information, e.g., a command response is received to a command from MCC-H that has a command rejection code greater than 0.

Command response information is also present in cyclic telemetry data. Cyclic telemetry data in all telemetry formats will contain the command response information for the last rejected command.

4.4.1.7.5.1 COMMAND RESPONSE - REQUIREMENTS

A. All cyclic telemetry from the C&C MDM (all telemetry paths) will contain the following command response information for commands sent from MCC-H: The three-word command response for the most recently rejected MCC-H originated command, a

one-word identification of the onboard origin of the rejection, a count of the total number of standard commands received from MCC-H, a count of the number of rejected standard commands from MCC-H, a count of the total number of data load commands received from MCC-H, a count of the number of rejected data load commands from MCC-H (all counters are one word). This response data is for the most recently rejected command. It does not differentiate between standard and file transfer load commands.

B. For high rate S-band telemetry, the C&C MDM will provide a command response packet which preempts the Housekeeping II telemetry packet when a command response is received at the C&C MDM indicating a command rejection.

4.4.1.7.6 COMMANDS TO FGB, NCS AND CCS VIA OIU

The uplink from the ground via the OIU allows a bent pipe communication from the ground via the OIU and its 1553 connection to the onboard C&DH systems. Commands are transmitted to the orbiter Payload Signal Processor (PSP), transferred to the OIU, and sent from the OIU either via its 1553 connection or via the Space–to–Space Communications System (SSCS) to the onboard C&DH system.. There are five possible connections between the OIU and C&DH system:

A. OIU as Bus Controller (BC) to Functional Cargo Block (FGB) MDM - This connection is used for Node1 activation.

B. OIU as RT to Node1 MDM - This connection is used for command and control of the onboard systems from 2A until the C&C MDM is activated at 5A.

C. OIU as RT to Node1 MDM which “passes thru” commands and telemetry to/from the C&C MDM - This connection is used at 5A and is available for contingency purpose through Flight 16A.

D. OIU as RT to Guidance, Navigation Control (GNC) MDM which “passes thru” commands and telemetry to/from the C&C MDM - this connection is used from 6A as the normal OIU to C&DH connection.

E Via the SSCS - This involves a 1553B data bus connection between the OIU and the Space-to-Space Orbiter Radio (SSOR) and a UHF link between the SSOR and the Space-to-Space Station Radio (SSSR) and the SSSR to the C&C MDM. The OIU does not support simultaneous use of the SSCS and the direct physical 1553B bus connection to communicate with the ISS. Configurations listed above are all mutually exclusive.

The command interface with the OIU is normally inactive from the C&DH point of view. Commands from crew/ground are required to activate the direct and UHF interfaces. After the orbiter docks with the Station, the MPLM may receive commands from C&C MDM via OIU.

4.4.1.7.6.1 GENERAL REQUIREMENTS

A The onboard C&DH system will be capable of processing at least one command per second from the OIU.

B The onboard C&DH system will be capable of polling for commands from the OIU via one direct path and the UHF path simultaneously, when the interfaces have been activated by crew/ground command.

C The onboard C&DH system will poll the OIU for commands on activated interfaces at least twice per second to ensure successful transfer of commands over the 1553B data bus.

D. MCC-H will ensure a minimum of 1-sec separation between the first bit one command and the first bit of a following command for commands sent to ISS via the OIU**. Note: The OIU provides capability to accept/buffer two commands per second to resolve contention between MCC-H-originated commands and Shuttle-originated commands.**

E MCC-H will reject any request for transmission of a command via the OIU if the command is longer than 62 words from the beginning of the CCSDS header to and including the command checkword.

F. For commands sent to or routed through the OIU to any C&DH device, MCC-H will add a one-word header and a one-word trailer as defined in Section 4.4.1.7.6.2.

G. Time authentication requirements specified in Section 4.4.1.7.2 will apply to MCC-H-originated commands sent via the OIU interface.

4.4.1.7.6.2 COMMAND FORMAT VIA OIU

For all commands transmitted to or through the OIU, the OIU requires two 16-bit words for OIU unique processing, one as a header and one as a trailer, allowing up to sixty-two 16-bit words for the “message” information between the header and trailer. If the transaction is addressed to ISS, the “message” is a CCSDS command, either a Standard command or a Data Load command. Only commands sent to the ISS are described in this PAH.

A. The first 8 bits of the first word of the “command” block will contain logical zero’s. **Note: The OIU uses these eight zero’s to distinguish the beginning of the “command” block from the nominal Payload Signal Process (PSP) idle pattern.**

B. The last 8 bits of the first word of the “command” block will contain an integer value that specifies the number of octets (bytes) following the first word of the “command” block, as follows: total number of 16-bit words in ”command” block multiplied by 2 to get a total “command” block size, then subtract 2 from the ”command” block size to get the final octet (byte) count.

C. The first 8 bits of the last word of the “command” block will define routing information for the OIU.

The routing information is an 8-bit code that identifies to the OIU the logical destination of the command. A routing code value of 0 indicates that the OIU is the final destination for the command. Each non-zero routing code is associated with a logical destination that is directly connected to the OIU via MIL-STD-1553B bus or is invalid. A connected logical destination is defined by specifying its logical device ID as well as the 12.5-ms subframe and the two RT subaddresses associated with the transfer of the command to the desired destination.

D. The last 8 bits of the last word of the ”command” block will contain parity data for the ”command” block. It will be used by the OIU to determine whether the ”command” block is correctly received.

Odd parity is calculated on the header through the routing information in the trailer of each ”command” block. The parity octet (byte) is calculated on a columnar basis.

The algorithm is as follows: perform successive “exclusive ORs” of octets (bytes) 1 thru n-1, this result is “exclusive OR’d with all 1’s to produce the parity octet (byte).” **Note: The checking algorithm is to Exclusive OR (XOR) octets (bytes) 1 through n and the result should be all 1’s.**

4.4.1.7.6.3 COMMAND MULTIPLEXING FROM ALTERNATE GROUND STATIONS

A. The MCC-H Ground Segment will receive, process, and multiplex the uplink command stream Standard commands and File Transfer commands from the following U.S. and IP Ground Stations:

(1) Payload Operations and Integration Center - POIC

(2) Mission Control Center-Moscow - MCC-M

(3) Canadian Space Operations Center - CSOC

(4) Japanese Space Operations Center - NSOC

(5) European Space Operation Center - ESOC

B. The Ground Segment will not pass-thru any command from a non-MCC-H control center containing an APID not assigned to that center.

4.4.1.7.6.3.1 PAYLOAD OPERATIONS AND INTEGRATION CENTER

A. The MCC-H Ground Segment will receive commands from POIC for the ISS at a maximum pass-thru rate of eight Standard commands per second.

B. The MCC-H Ground Segment will reject POIC-originated Data Load commands.

C. The MCC-H Ground Segment will receive and store on Ground Segment media POIC-originated files for future uplink to the Payload MDM via C&C MDM using the File Transfer Services.

D. MCC-H will reject requests for file transfers to any onboard nodes except the Payload MDM and payloads controlled by the Payload MDM.

4.4.1.7.6.4 MISSION CONTROL CENTER-MOSCOW

A. The MCC-H Ground Segment will receive one Standard command per second or one Data Load command per second and multiplex them into the uplink data stream.

4.4.1.7.6.5 CANADIAN SPACE OPERATION CENTER

[TBS]

4.4.1.7.6.6 JAPANESE SPACE OPERATION CENTER

[TBS]

4.4.1.7.6.7 EUROPEAN SPACE OPERATION CENTER

A. The MCC-H Ground Segment will receive commands from ESOC for the ISS at a maximum pass-thru rate of eight Standard commands per second and eight Data Load commands per second.

B. The MCC-H Ground Segment will multiplex on a first in, first out basis, ESOC-originated Standard commands and Data Load commands into the uplink stream.

4.4.1.8 FILE AND MEMORY TRANSFER (FMT)

File and Memory Transfer (FMT) provides transfer of data and files between ground control stations and onboard processors.

FMT provides four protocols: File Transfer, Data Load, Data Dump, and Diagnostic Dump. Only the File Transfer will be used by the payload. File Transfer moves files from a transfer source to a target disk or from a disk file to target memory (i.e., File Load to Memory).

There are certain rules for using FMT:

A. Two file transfer channels from the ground for uplink.

B. One downlink file transfer or dump to the ground; file transfer preempts data dump.

C. Ground-originated file transfer commands have priority.

D. Up to eight file transfer commands per second (can be multiplexed).

E. One data dump, but not when file downlink is ongoing.

F. Extended dump only supported for Crew Health Care System (CHeCS) devices (via Payload MDM), C&C MDM, APM MMC, and CEU.

4.4.1.8.1 FILE TRANSFER

File Transfer moves data between files. There is a source file and a target file involved in all file transfers. File uplinks are file transfers from the ground to the CCS disk. File Downlinks are file transfers from the CCS disk to the ground. File Downloads are file transfers from the CCS disk to another onboard disk. File Uploads are file transfers from an onboard disk to the CCS disk.

Direct file transfers occur between the transfer initiator and a target disk. Note that all direct file transfers are to or from the CCS disk. A File Uplink from the ground to the CCS disk is an example of a direct file transfer. The ground initiates the transfer, sends the data transfer packets, monitors the transfer, and terminates the transfer when the operation is complete.

Indirect file transfers are initiated by a command source, but carried out by the CCS File Transfer server. When an indirect file transfer is invoked, the server responds by setting up the transfer, sending or receiving the packets and terminating the transfer when the operation is complete. A ground initiated File Download from the CCS disk to an onboard node is an example of an indirect file transfer.

All file transfers from the ground to non-CCS disks are first staged on the CCS disk, so the command initiator performs two file transfer operations: first, it transfers the file to the CCS disk for staging, and then it transfers the file to the target destination. The only exception is ESA APM. **Note: ESA can choose to implement its own protocol between ESOC and APM endpoints. Commands and data are strictly pass-thru.**

To transfer a file from the POIC to an individual payload off of the Payload MDM requires several steps. First, the POIC transfers the file to MCC-H for transfer to ISS. MCC-H will transfer the file to the CCS staging buffer and then command the C&C MDM to transfer the file to the PL MDM disk. Commands to move the file from the PL MDM disk to a payload disk originate from POIC.

The requirements for file transfers are presented in four sections: first, the Ground-to-CCS File Uplink requirements; second, the CCS-to-Ground File Downlink requirements; third, the requirements for the ground to initiate indirect file transfers; and fourth, the command formats for all file transfers.

4.4.1.8.2 FILE UPLINK

A file uplink is a direct file transfer from MCC-H to the CCS disk. The ground initiates all file uplinks to the CCS disk. CCS will support two simultaneous file uplinks; the ground identifies the file transfer with a channel key.

For the uplink, files are partitioned into groups of 409,600 16-bit words, which is 1,600 blocks of 256 words. Each block is transferred in a single command. CCS reports the "received/not received" status for each of the 1,600 blocks of a group in the Group Status Bit Map, which is reported in a 100-word row of 0.1-Hz telemetry. Since ground can have two uplink file transfer channels open, there are two Group Status Bit Maps required. The ground can examine the Group Status Bit Map and determine which file blocks need to be retransmitted.

This section will first present a Ground to CCS File Uplink scenario, and then, the Ground-to-CCS File Uplink requirements.

4.4.1.8.2.1 GROUND-TO-CCS FILE UPLINK SCENARIO

In this scenario, the file source is a ground disk, the file destination is the C&C MDM disk:

A. The ground sends the Set File Name command to CCS with the Transfer APID set to the MCC-H to CCS APID and the Channel Key set to Channel 1 or Channel 2.

   (1) If there is a File Uplink from the ground on the specified channel, CCS rejects the command.

   (2) If the file is in use, CCS rejects the command.

   (3) If the file cannot be accessed (protection or path), CCS rejects the command.

   (4) Otherwise the CCS sets the File Uplink Status "File Name Set" indicator to one for the selected channel.

B. When the ground detects that the File Uplink Status "File Name Set" indicator for the selected channel is set, it sends the Start File Transfer command to CCS with the file size in bytes, the Group Number and Block Number set to one, and the Transfer APID set to the MCC-H to CCS APID.

   (1) If the file does not fit on CCS disk, CCS rejects the command.

   (2) Otherwise the (command is accepted), CCS clears the Group Status Bit Map for the selected channel.

C. The ground then starts the file transfer for the current group:

   (1) The ground sends File Transfer commands to CCS for blocks 1 to 1,600 of the current group.

(2) CCS receives file transfer blocks and sets the appropriate bit for the block received in the Group Status Bit Map.

(3) CCS commutates the Group Status Bit Map in 0.1-Hz telemetry.

(4) When the ground has finished sending all blocks in the current group, it resends all missing blocks as indicated in the Group Status Bit Map for the current group. This is repeated until all blocks in the group have been received by CCS.

(5) If this is not the last group, the ground sends the Start File Transfer command to CCS with the Group Number incremented and the Block Number set to one.

(6) When CCS receives the Start File Transfer command, it clears the Group Status Bit Map and updates the File Uplink Status for the selected channel (this cycle repeats until all groups are successfully transferred).

(7) When the ground detects that CCS has received all blocks in the last group, it sends a Terminate File Transfer command to CCS for the selected channel.

(8) When CCS receives the Terminate File Transfer command, it will close the file and update the File Uplink Status for the selected channel.

D. The ground can abort a file uplink by sending a Terminate File Transfer command to CCS with the Transfer APID set to the MCC-H to CCS APID and the appropriate Channel Key.

(1) CCS will terminate the connection and close the file when it receives this command.

(2) CCS will update the File Uplink Status for the selected channel.

E. CCS cannot terminate or abort a file uplink from the ground.

4.4.1.8.2.2 GROUND-TO-CCS FILE UPLINK REQUIREMENTS

4.4.1.8.2.2.1 SET FILE NAME

A. The ground will provide the capability to send the Set File Name command, and set the Transfer APID field in the command to the MCC-H to CCS APID and select one of two uplink channels.

B. Upon receipt of the Set File Name command where CCS is the destination of the file, CCS will reject the command if any of the following conditions are true:

(1) There is a File Uplink in progress on the specified uplink channel,

(2) The file is in use, or

(3) The file cannot be accessed (path or protection).

C. Upon accepting the Set File Name command, CCS will set the File Uplink Status “File Name Set” to one for the selected uplink channel and then start the file transfer.

D. The ground will send a Start File Transfer command to CCS, with the group number and block number set to one and specifying the length of the file in bytes, when the File Uplink Status “File Name Set” is set for the selected uplink channel.

E. CCS will reject the Start File Transfer command if the file will not fit on disk.

F. When CCS accepts a Start File Transfer command, it will clear the Group Status Bit Map for the selected uplink channel.

G. When the ground has sent all the blocks in the current group successfully and the current group is not the last group in the file, it will send a new Start File Transfer command to CCS with the group number incremented to indicate the next group and the block number set to one and then start the file transfer.

4.4.1.8.2.2.2 FILE TRANSFER

A. The ground will provide the capability to transmit eight 274-word File Transfer commands per second via the S-Band uplink. It will have the ability to multiplex two concurrent file uplinks.

B. The ground will provide the capability to transmit 1 File Transfer command of up to 64 words per second via the Service Module Control Computer (SMCC) link to CCS. The block size in this case must be set to 48.

C. CCS will be capable of receiving eight 274-word File Transfer commands per second from the ground.

D. The ground will start transmitting the blocks in the current group when the Start File Transfer command is accepted.

E. When CCS receives a valid File Transfer command, it will set the corresponding bit in the Group Status Bit Map for the selected uplink channel. CCS commutates the Group Status Bit Map for each of the two uplink channels in 0.1-Hz telemetry.

F. The ground will retransmit all blocks in a group that have not been successfully received by CCS as indicated in the Group Status Bit Map for the selected uplink channel.

4.4.1.8.2.2.3 TERMINATE FILE TRANSFER

A. When the ground detects that CCS has received all blocks in the last group, it will send a Terminate File Transfer command to CCS for the selected uplink channel.

B. The ground will provide the capability to send to CCS a Terminate File Transfer command at any point during the transfer with its own Transfer APID and an indication of the uplink channel.

C. Upon receipt of a valid Terminate File Transfer command, CCS will close the file and update the File Uplink Status for the selected uplink channel.

4.4.1.8.2.3 FILE DOWNLINK

A File Downlink is a direct file transfer from the CCS disk to the ground. The ground initiates all File Downlinks from the CCS disk. CCS will support only one File Downlink or one data dump (not for payload use) at a time. The ground can receive either normal or extended file dump packets, similar to data dumps. The ground must select the appropriate telemetry format to support the File Downlink using the extended file dump packets.

When a File is downlinked using normal file dump packets, the block size is 86 words; for extended, the block size is 374. Each block is transferred in a single packet.

This section will first present a CCS-to-Ground File Downlink scenario, and then, the CCS-to-Ground File Downlink requirements.

4.4.1.8.2.3.1 CCS–TO–GROUND FILE DOWNLINK SCENARIO

The file source is the C&C MDM disk, the file destination is a ground disk.

A. Ground sends the Set File Name command to CCS with the Transfer APID set to the CCS to MCC-H APID.

B. If there is an ongoing File Downlink to the ground, CCS rejects the command.

C. If the file does not exist, CCS rejects the command.

D. Else, CCS opens the file and updates the File Downlink Status.

   (1) The ground sends a Start File Transfer command to CCS with the Transfer APID set to the CCS to MCC-H APID and the block number set to 1.

   (2) CCS starts the file transfer operation when it receives the Start File Transfer command using a block size of 86 if normal telemetry is active or 374 if extended telemetry is active.

E. CCS sends File Downlink packets to the ground in telemetry stream.

F. The ground receives the File Downlink packets and checks the Block Number parameter to ensure there are no missing blocks.

G. If there is a missing block, then the ground sends a Start File Transfer command to CCS with the Transfer APID set to the CCS to MCC-H APID and the block number set to the missing block.

H. When CCS receives a Start File Transfer command from the ground, it starts transmitting from the missing block indicated in the command.

I. When CCS reaches the end of the file, it stops sending file transfer packets (will resume sending file transfer packets if it receives a Start File Transfer command before the Terminate File Transfer command).

(1) When the last block is received with no missing blocks, the ground sends a Terminate File Transfer command to CCS indicating the last block it received.

J. CCS will clear the downlink channel and close the file when it receives the Terminate File Transfer command.

(1) The ground can abort a File Downlink, if necessary, by sending a Terminate File Transfer command to CCS with the Transfer APID set to the CCS to MCC-H APID.

K. When CCS receives the Terminate File Transfer command, it will stop sending File Downlink packets.

L. CCS will clear the downlink channel and close the file.

(1) CCS-to-Ground File Downlink Requirements

4.4.1.8.2.3.2 SET FILE NAME

A. The ground will provide the capability to send the Set File Name command, and set the Transfer APID field in the command to the CCS to MCC-H APID.

B. Upon receipt of the Set File Name command where CCS is the source of the file, CCS will reject the command if any of the following conditions are true:

(1) If there is an ongoing File Downlink to the ground.

(2) The file does not exist.

Otherwise, CCS will open the file and update the File Downlink Status.

C. The ground will send a Start File Transfer command to CCS with the Transfer APID set to the CCS to MCC-H APID and the Block Number set to 1 when it detects the File Downlink Status is correct.

D. If the ground detects a Block Sequence Error while it is receiving File Downlink packets from CCS, then the ground will send a Start File Transfer command to CCS, with the Transfer APID set to the CCS to MCC-H APID and the Block Number set to the missing block.

E. Upon receipt of the Start File Transfer Command, CCS will start sending File Downlink packets to the ground sequentially from the Block Number identified in the command to the end of the file.

4.4.1.8.2.3.2.1 FILE TRANSFER

A. CCS will provide the capability to send File Downlink packets of either 96 or 384 words at 10 Hz using the Data Dump field of the telemetry buffer.

B. The ground will be capable of receiving File Downlink packets of either 96 or 384 words at 10 Hz.

4.4.1.8.2.3.2.2 TERMINATE FILE TRANSFER

A. When the ground has received all the blocks up to the last block of the file, it will send a Terminate File Transfer command to CCS with the Transfer APID set to CCS to MCC-H APID and indicate the last block it received.

B. The ground will provide the capability to send a Terminate File Transfer command to CCS at any point during the file downlink with its own Transfer APID, indicating the last block received in the file transfer.

C. Upon receipt of a valid Terminate File Transfer command with the Transfer APID set to the CCS to MCC-H APID, the CCS will clear the downlink channel and close the file.

D. When the end of the file is reached, CCS will stop sending file transfer packets until it receives a new Start File Transfer command from the ground.

4.4.1.8.2.4 INDIRECT FILE TRANSFERS

The ground sets up indirect file transfers between the CCS disk and other onboard nodes. An indirect file transfer where the CCS disk is the file source is called a file download; an indirect transfer where the CCS disk is the file destination is called a file upload. The ground sets up indirect file transfers by sending Set File Name commands to the file source and file destination. CCS then initiates the file transfer.

For file transfers to lower tier JEM nodes, the JEM Control Center will first establish a File Transfer pipe between the CCS and JEM JCP via 1553B interface. It does this by sending a Setup File Upload command to CCS.

CCS maintains status on each active file transfer that is available for retrieval by the ground:

A. Current state of the transfer with values for Not Ready, In Progress, Completed, and Terminated

B. Type of Transfer with values for Direct and Indirect

C. File Name

D. Transfer APID (file source to file destination APID)

E. File Length

F. FMT Status from each MDM, including indicators for Source File Name Set, Destination File Name Set, File Upload Pipe Open, Terminate Requested, and Ready to Receive.

4.4.1.8.2.5 FILE LOAD TO MEMORY

The ground can initiate a file load to memory operation to load an image file stored on the C&C disk into an MDM's memory. The file load to memory operation is initiated by sending a Set File Name command to C&C with the Transfer APID parameter set to the CCS to destination APID, the Storage Type parameter set to Dynamic Random Access Memory (DRAM) or Electrically Erasable Programmable Read Only Memory (EEPROM), and the file name containing the name of an image file. The C&C will read the first record of the file to determine the starting address for loading the image. The C&C provides status information on the progress of the file load operation as described in Section 4.4.1.8.2.4. When the load operation is complete, the ground can verify the load operation using several techniques: dumping the Bit Summary Table (BST) to see if there was an error in a Data Load command; initializing the MDM and checking the state (checksum error will cause it to transition to Diagnostics); or dumping the Bit Response Table which has additional information than the BST.

An image file created with the Honeywell build tools has a header record at the beginning of the file that contains three fields: DRAM load address, size, and initial instruction pointer. This file also contains a checksum in the last word of the image. This record is part of the image and needs to be loaded into DRAM or EEPROM.

4.4.1.8.2.6 FILE TRANSFER COMMAND FORMATS

Refer to SSP 41175–2, Section 3.4.1 for complete definitions of File Transfer Command Formats.

4.4.1.9 ONBOARD TIME MANAGEMENT

Time is maintained in each MDM's clock using the CCSDS segmented time representation. The segmented time is a Binary Coded Decimal (BCD) calendar time represented as year, month, day, hour, minute, and second. In addition, the clocks contain binary subseconds and Universal Time Code (UTC) conversion parameters. The CCSDS packet secondary header contains a time value in unsegmented CCSDS time format. Unsegmented CCSDS time is represented as the number of seconds since a reference time, or epoch; the epoch used for Station is the Global Positioning Satellite (GPS) Epoch which is midnight January 5 (0000 hours January 6), 1980.

4.4.1.9.1 PRIMARY C&C MDM TIME MAINTENANCE

The Primary C&C MDM receives time data in cyclic data acquisition from the Service Module (Russian Segment) and from the GNC MDM (GPS Time starting at 8A) and makes these times available in telemetry. The time data includes the value of the absolute time in CCSDS Unsegmented time format and the difference between the source time and the C&C's local reference time. When the Primary C&C MDM receives a command to synchronize to a time source, it will control its local reference time (i.e., the Station master time) to the selected time source using gradual time correction to regain sync with the selected time source and then, once in sync, drift compensation to maintain its local reference time in sync with the external time. If the command is a Sync to External Time Source With Jump, then C&C will reset the Station time to within 5 seconds of the external time and gradually correct out the remaining difference using gradual time correction until it is in sync with the external source. If the command is a Sync to External Time Source Without Jump, then C&C will gradually correct out the remaining difference using gradual time correction until it is in sync with the external source. When the Primary C&C MDM receives a command to Use Local Time, the C&C clock is used without control from an external time source.

When C&C is not in sync with the selected external time source and gradual time correction is enabled, C&C will adjust its clock rate by up to 100 microseconds per second to gradually reduce the difference between the external time and its local reference time. C&C can correct up to 8.64 seconds per day using gradual time correction.

The "time tags" in CCSDS headers and log files will be based on the C&C MDM time reference. When C&C is out of sync with the external time source or using its internal clock autonomously, MCC-H will need to convert the C&C time reference to an MCC-H time reference for telemetry and log files; under these conditions, it will need to convert the MCC-H time reference to the C&C time reference for commands **[formulas TBS]**.

4.4.1.9.1.1 MDM RT TIME MAINTENANCE

Time is distributed onboard the Station using a time broadcast message on the 1553 buses. The Station master time source (C&C) broadcasts its local reference time at a 1-Hz rate on all buses for which it is the Bus Controller (BC). Remote Terminals on these control buses receive this time broadcast and adjust their local reference time using the MDM drift compensation logic, and then broadcast their local reference time to lower tier Remote Terminals. Similarly, Tier 3 processors use the broadcast time value to adjust their clocks.

The internal time used by an MDM for all time functions (e.g., time tagging, scheduling, time broadcasts to RTs) is referred to as the MDM's local reference time. Local reference time is maintained in the Real-Time Clock's Local Reference Clock (LRC). An MDM RT's local reference time is based on its BC's local reference time. The BC broadcasts its local reference time every second. The MDM RT receives this external time in the Real-Time Clock's

Temporary Holding Clock. This time is biased by a constant unique to the MDM to compensate for the transmission delay.

An MDM's drift compensation logic maintains the local reference time within 100 microseconds of the received time broadcast. If the local reference time differs from the time broadcast by more than 350 microseconds for 3 consecutive seconds, then the MDM declares itself out of sync. This situation can arise when there is a failure of the BC and a cold backup is brought on-line. The RT's local reference time will drift until it starts to receive time broadcasts from the new BC, at which time it could be out of sync. The Loss of Sync Indicator for each MDM is available in telemetry. The ground can send a Sync to Bus Interface Adapter (BIA) command to an MDM that is out of sync to force it to resynchronize to its BC.

4.4.1.9.1.2 MDM FRAME SYNCHRONIZATION

Each MDM derives its frame count and frame boundary time from its local reference time. Thus an MDM must be in time sync to be in frame sync. The MDM's drift compensation logic maintains time synchronization between an MDM and its BC. Since all MDMs use this drift compensation, the effect is that all of the MDM clocks follow the master clock in the C&C MDM.

4.4.1.9.1.3 RESETTING STATION TIME

Station time can be changed by selecting a different external time source. When the ground wants the Station time to reflect a new time source (GPS or RS), an operator will send a Sync to GPS With Jump or a Sync to RS With Jump command to the Primary C&C MDM. The Primary C&C MDM will then send Set Time commands to all Station processors to effect a Stationwide time change. The C&C MDM software determines, based on its local reference time and the time data from the selected external time source (absolute and delta times) when to reset the Station time. It will set the Station time to the nearest 10-sec boundary of the selected external time source to avoid disrupting frame synchronization. Each processor will respond to the Set Time command by resetting their local reference time to the specified time at the time specified by the command. The effect will be that all of the processors will change time at the same time (assuming that all processors are in sync before the set time command is sent - which is an operator responsibility). When the Station time change occurs, there will be no change in the frame relationships (no short or long frames) and no pause in the cyclic processing, because both times are on 10-sec boundaries.

After the Set Time commands have been executed, the Station time will be within 5 sec of the selected external time source (the absolute value of the time delta will be 5 sec or less). If gradual time correction is enabled, C&C will adjust its clock rate by up to 100 microseconds per second to gradually reduce the difference between the external time and its local reference time. All other MDMs follow the C&C clock, adjusting their clock rates automatically with drift

compensation logic. The result will be that the C&C MDM will be synchronized to the external time source in less than a day.

Resetting Station time is a major event. The operators must safe applications that are sensitive to a time change prior to sending the Sync to GPS With Jump or Sync to RS With Jump commands.

4.4.1.9.1.4 CHANGING TIME SOURCE

The ground can choose to select a different time source (GPS or RS or internal) without resetting Station time by sending a Sync to GPS Without Jump or a Sync to RS Without Jump command to the Primary C&C MDM. The Primary C&C MDM will then start controlling its local reference time to the selected external time source. If C&C is not in sync with the selected external time source and gradual time correction is enabled, C&C will adjust its clock rate by up to 100 microseconds per second to gradually reduce the difference between the external time and its local reference time. C&C can correct up to 8.64 sec per day using gradual time correction. The other MDM's follow the C&C clock, adjusting their clock rates automatically with drift compensation logic, and thus maintain time and frame synchronization.

The ground can also choose to use the C&C local reference time without any influence from external time sources as the Station master time by sending the Use Local Time command to C&C. When C&C receives this command, it will not perform gradual time correction or drift compensation.

4.4.1.10 LSM AND LSM OVERRIDE

All commands to the USOS contain two LSM words following the CCSDS header (command words 9 and 10). The LSMs words are established for each command in the MSB. They indicate, for each ISS mode, whether or not it is allowable to execute the command in the currently engaged mode. Capability has been provided to allow MCC-H and crew the capability to override the LSM check performed by the Space Segment. A description of the LSM checks and requirements relating to the LSM override capability are provided in the paragraphs which follow.

4.4.1.10.1 STATION MODE DEFINITION

Fourteen modes are defined for the ISS. They are:

A. Proximity Operations - Tended

B. Proximity Operations - Untended

C. Standard - Tended

D. Standard - Untended

E. Microgravity - Tended

F. Microgravity - Untended

G. Orbit Correction - Tended

H. Orbit Correction - Untended

I. External Operations - Tended

J. External Operations - Untended

K. Assured Crew Return - Tended

L. Assured Crew Return - Untended

M. Survival Mode - Tended

N. Survival Mode - Untended

Every commanded sent for execution in the USOS, Mission Support Services (MSS) **[TBC]** and MPLM **[TBC]** is first checked to ensure that command execution is allowed in the currently engaged mode. LSM words are always in words 9 and 10 of the Command Set immediately following the CCSDS header (words 1 through 8).

4.4.1.10.2 LSM CHECKING - SPACE SEGMENT

A. Upon receipt, the Space Segment will perform LSM checks on the following real-time commands:

(1) All commands to be executed with in the USOS,

(2) All commands to be executed within the MSS/Remote Workstation (RWS) **[TBC]**,
and

(3) All commands to be executed within the MPLM **[TBC]**.

B. Upon de-queuing from the Time-Tagged Command Queue, the Space Segment will perform LSM checks on the following time-tagged commands:

(1) All commands to be executed with in the USOS

(2) All commands to be executed within the MSS/RWS **[TBC]**,
and

(3) All commands to be executed within the MPLM **[TBC]**.

C. The Space Segment will not perform LSM checks on the following real-time or time-tagged commands:

(1) Commands passed through to APM,

(2) Commands passed through to SM CC,
or

(3) Commands passed through to JEM.

D. For any command for which LSM checking is required, the Space Segment will verify that the command is authorized for execution in the currently engaged ISS mode.

E. If the command is not authorized for execution, the Space Segment will:

(1) Reject the command if the command is a time-tagged command, i.e., it will not be possible to override the LSM check in time-tagged commands,
or

(2) Reject the command if the command is a real-time command and the LSM Override Request Code in the command does <u>not compare</u> with the LSM Override Authorize Code in the CCS database.

F. If the LSM Override Request Code in the command is equal to the LSM Override Authorize Code in the CCS database:

(1) The LSM Override Occurred Counter will be incremented,

(2) Words 1 through 10 of the overridden command will be stored in the LSM Override Circular Buffer, along with time,
and

(3) The command will be accepted for further command validation and distribution/execution.

G. The LSM Override Occurred Counter will be included in all telemetry formats.

4.4.1.10.3 LSM CHECKING - GROUND SEGMENT

A. The Ground Segment will reject any request for transmission of a real-time command that is not legal in the current ISS mode by comparing the current ISS Mode provided in telemetry with the corresponding LSM bit in the command, as follows:

(1) The requesting operator will be notified that the command has been rejected because it is illegal in the current mode,

(2) The requesting operator will be provided capability to input a binary Override Code,

(3) A second operator at a different terminal will be provided capability to confirm the Override Code by entering in the same binary value,
and

(4) The Ground Segment will insert the confirmed Override Code in the command, increment the packet sequence count, time field, and checksum per Section 4.4.1.7 and transmit the command to the Space Segment.

B. Upon receiving a request to transmit a time-tagged command which is illegal in the current Station mode, the Ground Segment will:

(1) Provide a warning notification to the operator, and

(2) Transmit the command to the Space Segment only when the operator has confirmed the request.

C. The Ground Segment will not provide capability to insert an Override Request Code in a time-tagged command.

D. Ground Segment command generation software will not maintain a program/database copy of the Override Authorization Code.

E. Ground Segment software will not manipulate or allow operator manipulation of the LSM settings in LSM words as provided to the Ground Segment in the MDB.

4.5 COMMUNICATIONS AND TRACKING

C&T is a collection of functions that provide for the exchange of audio, video, and data. The C&T system is composed of the Global Positioning Subsystem, Video Distribution System, Audio Distribution System, Ultra High Frequency (UHF) System, S-band System, and Ku-band System. The Global Positioning System provides Station time reference and orbital position data. Space vehicle communications terminology uses “forward link” to refer to a link from the ground to the vehicle and the Station and “return link” to refer to a link from the vehicle and Station to the ground. Communications between the Space Station and the ground facilities are supported on orbit by the S-band and Ku-band.

The Audio Distribution Subsystem provides a multi-channel, multi-access, full duplex audio intercommunications network on board the Station. The subsystem employs fiber optic and hardwired audio distribution. The audio distribution subsystem does not interface with payloads.

The Video Distribution Subsystem provides generation, distribution, and display capability of video images on board the Station. The video subsystem consists of cameras, monitors, tape recorders, and video switching and distribution equipment. The subsystem supports viewing of internal habitable locations, crew entertainment, crew training, viewing from Station windows, payloads, and workstation activities. The downlink video is compliant with National Television Systems Committee (NTSC) and provides SMTP–170 format (Color Television Studio Picture Line Amplifier Output Drawing).

4.5.1 S-BAND SYSTEM

4.5.1.1 HIGH RATE S-BAND COMMAND UPLINK INTERFACE DEFINITION

4.5.1.1.1 OVERVIEW

This section provides definition of the MCC-H to USOS via the high rate S-band uplink path. The high rate S-band operates at three different bit rates depending on the number of active audio channels.

The USOS C&C MDM, which processes all high rate S-band commands, operates at a basic 10-Hz processing rate (100-ms processing frames). Capability is provided to process a Standard commands and a File Transfer command in the same processing frame. The following paragraphs define constraints which must be observed by the Ground Segment while commanding over the high rate S-band.

4.5.1.1.2 COMMAND SEPARATION AT HIGH RATE

A. The Space Segment will provide capability to accept and process at least eight Standard commands per second and eight Data Load/File Transfer commands per second (based on the onboard time source) from the Ground Segment when the S-band uplink is operating at high rate.

B. Ground Segment will send commands via S-band uplink to Space Segment at rates not to exceed eight Standard commands per second and eight Data Load/File Load commands per second based on the ground time source.

Note: Data Load commands and Standard commands can be transmitted in any order and with any desired command separation.

Note: At maximum allowed command rates to USOS endpoints and APM endpoints, using maximum sized commands, bandwidth of 43,264 bps and 45,056 bps respectively, is required. Therefore, maximum command rates cannot be achieved with both audio channels active.

Processors and application functions on board the Space Station execute at various processing rates. These processing rates usually correspond to the rates at which commands can be accepted. In addition to MCC-H, there are a number of additional command sources, including eight crew laptops, core and payload Timeliners, onboard safing queues, and a time-tagged command queue. C&DH software maintains queues to buffer commands in the event that multiple sources or a single source issues commands at rates which exceed the onboard transfer and processing rates. If, despite onboard buffering, a queue fills, the Space Segment will reject subsequent commands to that queue and notify the command source, as defined in C&T command response. Except for specified endpoints/functions defined in this PAH, the Ground Segment is NOT required to meter commands to individual onboard destinations.

4.5.1.2 S-BAND LOW RATE COMMAND UPLINK INTERFACE DEFINITION

4.5.1.2.1 OVERVIEW

This section provides definition of the MCC-H to USOS via the low rate S-band uplink path. The low rate S-band operates at the single rate of 4,781 bps. Audio capability is not available.

Low rate S-band uplink capability is available at Flight 4A, with the onboard command processing function being performed by the Node1 MDM Control Software (NCS). At flight 5A, the S-band equipment string is switched to the C&C MDMs and the onboard command processing function is the C&C MDM Control Software (CCS). The flight software is capable of processing commands at the same rates as for high rate, but the actual command rate is governed by the uplink bit rate. Table 4.5.1.2.1–I provides insight into achievable command rates.

The following paragraphs define constraints which must be observed by the Ground Segment while commanding over the low rate S-band. These requirements apply when commanding the NCS at 4A to 5A and when commanding CCS at low rate, 5A, and on.

TABLE 4.5.1.2.1–I LOW RATE S-BAND COMMAND RATES

COMMAND LENGTH	THEORETICAL COMMAND RATE	ALLOWABLE COMMAND RATE
24 words	12.4	8
64 words	4.6	8
288	1.03	8

4.5.1.2.2 COMMAND SEPARATION AT LOW RATE

A. The Space Segment will provide capability to accept and process at least eight Standard commands per second and eight File Transfer commands per second (based on the onboard time source) from the Ground Segment when the S-band uplink is operating at low rate.

B. Ground Segment will send commands via S-band uplink to Space Segment at rates not to exceed eight Standard commands per second and eight File Load commands per second.

The present uplink of singular and file commands will experience transmission delays. Uplink of singular commands have a minimum of approximately **(TBD #8)** sec round trip latency between the front end of the POIC workstation and the PL MDM. Command file transfers require multiple interactions to establish the links from the User to the PL MDM. Each transfer must be completed before the next is initiated, and manual intervention is required. Latency, in this case, depends on the size of the file and the timelines of the manual transfer.

4.5.2 SPACE-TO-GROUND SUBSYSTEM (KU-BAND)

The Space-to-Ground Subsystem (SGS) provides high rate communication with the ground via TDRSS Ku-band single access service. This link supports downlink of payload data (payload health and status and payload science), video (with associated audio routed through S-band). The Ku-band provides 50 Mbps downlink, with an effective downlink rate (overhead removed) of approximately 43 Mbps for payload data and video. There is no payload data uplink capability in the Ku-band.

Note: Forward Ku is in development.

There is limited availability of TDRSS usage due to other program demands, antenna blockage, and Zone of Exclusion (ZOE) outage. Ku-band usage will be a scheduled resource.

4.5.2.1 HIGH RATE FRAME MULTIPLEXER (HRFM)

The HRFM is the data multiplexer and formatting unit for the SGS. There are 12 data inputs to the HRFM, 1 data output, and 1 command and status port. The data inputs come from two types of sources. The eight HRDL inputs originate in the APS. The four remaining inputs originate in the Video Base–band Signal Processor (VBSP). Command and status information passes over the C&C MDM control bus. Data output from the HRFM proceeds to the HRM (High Rate Modem) then to the Space–to–Ground Antenna (SGANT) (transmitter) for transfer to the ground.

4.5.2.2 HIGH RATE MODEM (HRM)

The HRM receives binary Non-Return-to-Zero-Level (NRZ-L) baseband data at 50 Mbps from the HRFM. The NRZ-L baseband is converted by the HRM to Non–Return–to–Zero–Mark (NRZ-M) and Baseband Phase Shift Keying (BPSK) modulating on an 843.4-MHz Intermediate Frequency carrier. The signal is transmitted over a coaxial cable and routed to the space-to-ground transmitter.

4.5.2.3 INTERNAL AUDIO SUBSYSTEM (IAS)

The Internal Audio Subsystem (IAS) is a multi-channel, multi-access, full duplex, audio intercommunication network for use on the Station. The IAS provides hardwired voice communications. The IAS also provides communication with the ground, off-board UHF systems, and a docked orbiter.

Although there is not a physical interface between payloads and the IAS, crewmembers provide support to payload operations through the IAS. The payload mission specialists interface to the IAS will be the Crew Communications Headset (CCH) (with extension if required) or the portable microphone connected to the Audio Terminal Unit (ATU). These systems will allow the mission specialist the capability to interface with the ground, recorder, or Station crew and to annotate an experiment or have two-way communication with either the ground crew or Station crew while working directly with the payload.

4.5.2.4 INTERNAL VIDEO SUBSYSTEM

The Internal Video Subsystem (IVS), see Figure 4.5.2.4–1, provides the capabilities required to generate, control, switch, display, record, and distribute video signals on the Space Station. Portable cameras (camcorders) are available for video surveillance in the USL. One portable camera is available for payload use. Included with the portable camera is a viewfinder monitor and a camera mounting bracket for attaching the camera to the front of a rack. PDs are permitted to use the ISS IVS to downlink video signals from User-provided equipment.

The payload will transmit the video signal to the Common Video Interface Unit (CVIU). The CVIU will convert the payload signal into the optical Pulse Frequency Modulation (PFM) format on fiber optic cables for use by the onboard Video Distribution System (VDS) (except the video signal in JEM). Distribution of payload video and synchronization signals is via one of the Video Switch Units (VSU) in the USL. VSUs allow for distribution of up to four payload video signals to the VBSP for downlink to the ground, up to three video signals to each of the workstations for display on the monitors, and one video signal to each of the two Station video recorders.

The Synchronization and Control Unit (SCU) generates horizontal and vertical video synchronization signals which conform with the NTSC EIA-RS-170A black burst. The vertical blanking interval is used for camera, pan/tilt or lens control, and data transmission. The data transfer is on an individual retrace line basis. Multiple data words may be contained within each retrace line. The SCU provides a time tag at least once per frame and inserted in line 15 of the synchronization signal vertical interval. The time code is referenced to the Space Station time standard, with a resolution of 1 ms, and an accuracy of one video frame time. The Station-provided external cameras will read the time tag on the synchronization signal and return the time tag in line 15 of the vertical interval of the video signal.

4.5.2.4.1 VIDEO RECORDING

The IVS video recorders are Hi-8 format using removable cassette tapes with a maximum recording capacity of 2 hr. The video recorder preserves a time tag that is inserted on line 15 of the vertical blanking interval. The video recorder records and plays back the payload video using the IAS, shown in Figure 4.5.2.4–1, as the source of the audio signal. Video tape recorders are provided by directly attaching to the VSUs and the IAS. Four video cassette recorders are provided by the program as “strap-on” units to the ISPRs.

4.5.2.4.2 VIDEO DOWNLINK

Payload video data can be routed, switched, and formatted for downlinking within the IVS. At any time, up to 4 of the 16 VSU input channels can be switched to output channels connected to the VBSP. The VBSP receives the PFM composite video signal and outputs digital data in CCSDS packet format for downlinking via Ku-Band. In the absence of a continuous video input, the VBSP transmits physical-layer sync words to maintain synchroneity with the HRFM. The VBSP outputs an aggregate average data rate for the HRFM input that is a maximum of 43 Mbps. One video channel consumes 21 Mbps with a resultant downlink of every other field of video. For two simultaneous video channels the maximum downlink is every fourth video field, and for three or four simultaneous video channels, the maximum downlink is every eighth video field. The burst data rate for an individual output channel may briefly exceed 43 Mbps but always less than 95 Mbps. The VBSP in JSC will convert the digitized signal to an analog signal and transmit to the payload.

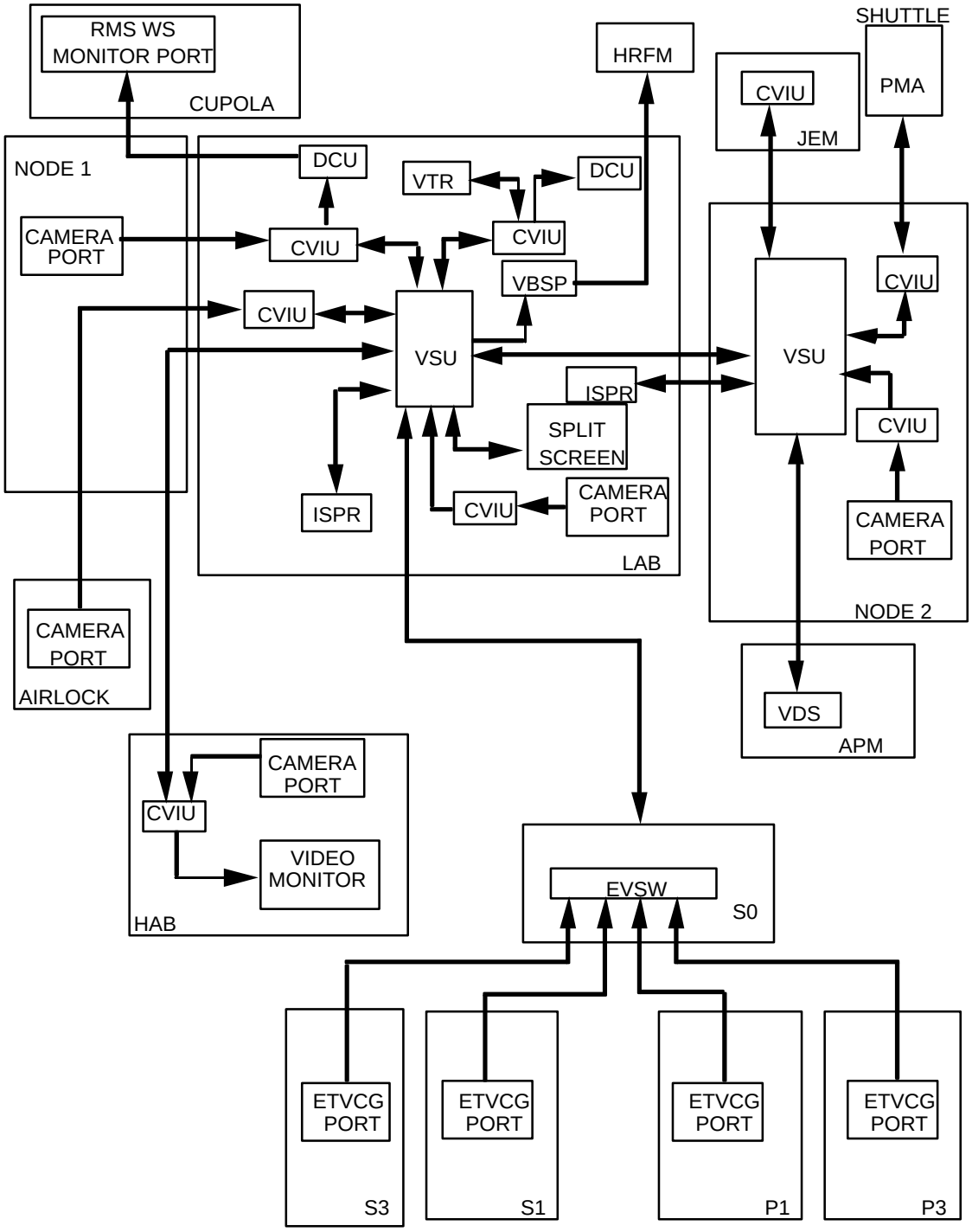

FIGURE 4.5.2.4–1 INTERNAL VIDEO SUBSYSTEM

4.5.2.4.3 VIDEO INTERFACE UNIT

The IVS uses fiber optics for distribution of the video signals from/to payloads. The CVIU will convert between a PFM optical signal and a baseband electrical signal conforming to NTSC EIA-RS-170A. This will enhance distribution of video to User-supplied video equipment. The CVIU will also provide the required conversion of electrical to optical signals for payload video transmission back to the IVS.

4.5.2.5 JEM C&T FOR PRESSURIZED PAYLOADS

(TBD #9)

4.5.2.6 APM C&T FOR PRESSURIZED PAYLOADS

(TBD #10)

4.5.2.7 CAM C&T FOR PRESSURIZED PAYLOADS

(TBD #11)

4.6 THERMAL CONTROL

4.6.1 PAYLOAD THERMAL CONTROL INTERFACES

The payload rack thermal coolant interface (input and output) is at the UIP. Each laboratory provides a Moderate Temperature Loop (MTL) interface to ISPR locations. A Low Temperature Loop (LTL) interface is available at each USL ISPR location, CAM payload locations and selected JEM ISPR locations. Characteristics of the cooling fluid loops are shown in Table 4.6.1–I. The USL provides one flow controller Rack Flow Control Assembly (RFCA) in each ISPR location standoff that can be manually connected to either the moderate temperature or low temperature return lines. The CAM provides one RFCA at each payload location for controlling MTL, and, only at the Refrigerator/Freezer location, a RFCA for controlling LTL. The JEM provides flow valve for MTL at all ISPR locations and a flow control valve for LTL where LTL is provided to ISPRs.. The APM provides only MTL and provides flow modulation using stepper motor valves that can be positioned to be either full on or off and can be set at an intermediate position, but no flow metering is provided by the APM at the individual ISPR location.

Payloads generally connect directly to the Internal Active Thermal Control System (IATCS). Payload components interfacing with IATCS fluid are required to satisfy Space Station cleanliness and material requirements found in SSP 30573, Space Station Program Fluid Procurement and Use Control Specification.

For payloads in the USL and CAM that require LTL fluid and MTL fluid cooling, simultaneous connection to low and moderate temperature loops may be used. The use of both the MTL and LTL requires, however, that the payload regulate the flow in one of the loops, since there is only one RFCA available at each Rack location. Cross–connection of the two loops is not allowed in any of the modules and the payload design must be fault tolerant in preventing this occurrence.

The air conditioning systems in the laboratory modules are not designed to support heat from payloads using cabin air for cooling. A limited capability to do this is discussed below and varies between the modules. ISPR mounted payloads should design to reject heat to the internal avionics cooling air loop inside of the payload rack or to cold plates inside the payload. Aisle mounted payloads may reject heat to the cabin air since this is the only resource available to them for this purpose. Operational limitations will be applied if the capabilities of the module's air conditioning system are exceeded.

For design and analysis purposes, the wall temperatures on the ISS are provided in Table 4.6.1–I.

TABLE 4.6.1–I ISPR LOCATION ITCS LOOP INTERFACE CHARACTERISTICS

Element:	System Control Capability	Moderate Temperature Loop		Low Temperature Loop	
		lb/hr (kg/hr)	lb/hr (kg/hr)	lb/hr (kg/hr)	lb/hr (kg/hr)
		Module Total	Available at Single P/L Location	Module Total	Available at Single P/L Location
USL[8] (Post 20A)	± 5% > 350 lb/hr ± 10% ≤ 350 lb/hr	1050 (476)	100 – 1050 (45 – 476)	890 (403)	100 – 890 (45 – 403)
USL[1][8] (Pre 20A)	± 5% > 350 lb/hr ± 10% ≤ 350 lb/hr	700 (318)	100–700 (45 – 318)	390[9] (403)	100 – 390[9] (45 – 403)
APM	± 10% of calibrated flow [2]	1,430 (650)	66 – 419 (30 – 190)		
JEM[3]	–0/+154 lb/hr MT –0/+176 lb/hr LT	218 – 1,014[4] (99–462)	100 – 436 (45 – 198)	343 – 686[5] (156 – 312)	100 – 512 (45 – 232)
CAM	± 5% > 350 lb/hr ± 10% ≤ 350 lb/hr	1,489 (675)	100 – 400 (45 – 181)	821[6] (372)	100 – 400[6] (45 – 181)
MPLM	± 15% of flow set at $P_E/4.4$ [7]			500 (227)	$P_E/5.0$ to $P_E/4.4$

Note:

[1] The airlock requires 350 lb/hr (159 kg/hr) of USL MTL prior to the arrival of Node 3 on flight 20A. Flow rates greater than 700 lb/hr may be available when the Airlock is in Housekeeping mode. Use of this additional flow must be pre–coordinated with the Thermal Control Systems team.

[2] The APM will provide a pressure drop across the interface of 5.8 psid (40 kPa) for all flow rates within the specified range when the Water Flow Selectability Valve (WFSV) is fully open. Reduction in flow rate can be achieved either by partial closing of the WFSV, leading to a reduced pressure drop across the interface, or by internal flow control valves, if such valves are present. If the payload is utilizing internal flow control valves, the payload must be capable of accommodating this pressure drop for all flow rates equal to or less than the rack maximum flow rate. The APM will provide an accuracy of +/– 10% corresponding to the flow rate calibrated for that rack on the ground at a pressure differential across the interface of 5.8 psid (40 kPa).

[3] The JEM will provide a pressure difference higher than 6.0 psid (41.4 kPa) across an integrated rack for all flow rates within the specified range. The payload will be capable of accommodating this pressure drop for all required flow rates. Any changes in MTL or LTL flow rate must be coordinated with NASDA MCC.

[4] Total available depends on MTL use by JEM airlock, RMS, and EF as well as operating configuration (single or dual loop).

[5] Total available depends on flow through condensing heat exchangers and operating configuration (single or dual loop).

[6] Payload use of CAM LTL is limited to 321 lb/hr (146 kg/hr) when the MPLM is docked.

[7] P_E=payload electrical power in watts.

[8] The total flow indicated available for payloads assumes the USL MTL pump is providing a total flow of 3200 lb/hr (1451 kg/hr).

[9] The airlock requires 500 lb/hr (226 kg/hr) of USL LTL while in operation prior to the arrival of Node 3 on Flight 20A. Flow rates greater than 390 lb/hr (177 kg/hr) may be available when the Airlock is in Housekeeping mode. Use of this additional flow must be pre–coordinated with the Thermal Control Systems team.

TABLE 4.6.1–II WALL TEMPERATURES

Thermal Conditions	Value
USL Module Wall Temperature	13 °C to 43 °C (55 °F to 109 °F)
JEM Module Wall Temperature	13 °C to 43 °C (55 °F to 109 °F) **[TBR]**
APM Module Wall Temperature	13 °C to 43 °C (55 °F to 109 °F) **[TBR]**
CAM Module Wall Temperature	13 °C to 43 °C (55 °F to 109 °F) **[TBR]**
Other Integrated Payload Racks	13 °C to 43 °C (55 °F to 109 °F) **[TBR]**

4.6.2 DELETED

4.6.3 USL INTERNAL ACTIVE THERMAL CONTROL SYSTEM

Figure 4.6.3–1 illustrates the USL IATCS. IATCS loops are pumped, single–phase, water loops that collect waste heat from subsystem and payload equipment within the modules and transport the waste heat to ammonia–water Interface Heat Exchangers (IHX) located externally. The USL contains a LTL and a MTL which can reject a combined total of 14.0 kW for payloads. The Loop Crossover Assembly provides the ability to operate the LTL and MTL either independently (dual–loop configuration) or in the cross–connected mode (single–loop configuration). The LTL and MTL may be cross–connected to provide redundancy in the event of a failure of one of the fluid loops (for example, an IHX or Pump Package Assembly (PPA) failure). The LTL and MTL are plumbed in a parallel, reverse–return manner. The reverse–return feature ensures equal system flow length through each rack and allows simplified flow balancing for simultaneously changing heat loads. The cross–connected fluid circuit can be operated from either the low temperature or moderate temperature PPA. During normal operations, the USL operates in the dual–loop configuration.

The general approach for controlling the ITCS is to allow the ITCS pump to supply the necessary flow to the system while the System Flow Control Assembly (SFCA) balances the differential pressure between the supply and return lines. The RFCA provides the ability to vary the coolant flow to each rack for removal of waste heat. The RFCA contains a flow meter and temperature sensor so that the removal of waste heat from the rack may be controlled by maintaining specified outlet temperature or fluid flow rate. As the RFCAs modulate flow to the racks, the SFCA responds to the system flow changes by modulating a control valve to maintain a constant differential pressure. For ISPR locations, the RFCA is physically located in the standoff.

Each ITCS pump can generate enough flow and head rise (3000 lb/hr (1400 kg/hr), 66.2 psid (457 kPa)) to supply coolant to both the LTL and MTL when cross–connected. In the dual loop configuration, the SFCA control valve setting is adjusted to maintain proper differential pressure while allowing the pump speed to be reduced for the lower flow requirements. The system accumulator can be pressurized up to 45 psia. Thus, the total system pressure for component and system design is 115 psia.

The minimum differential temperature between the inlet and outlet to the payload rack using the MTL must be 35°F, whenever the electrical power levels exceeds 1,025 W. In the event, however, that the payload cannot achieve that temperature difference, an exception must be obtained. For power levels below the 1,025 W limit, a coolant flow of 100 lbm/hr is provided for all conditions and the 35°F temperature increase does not apply.

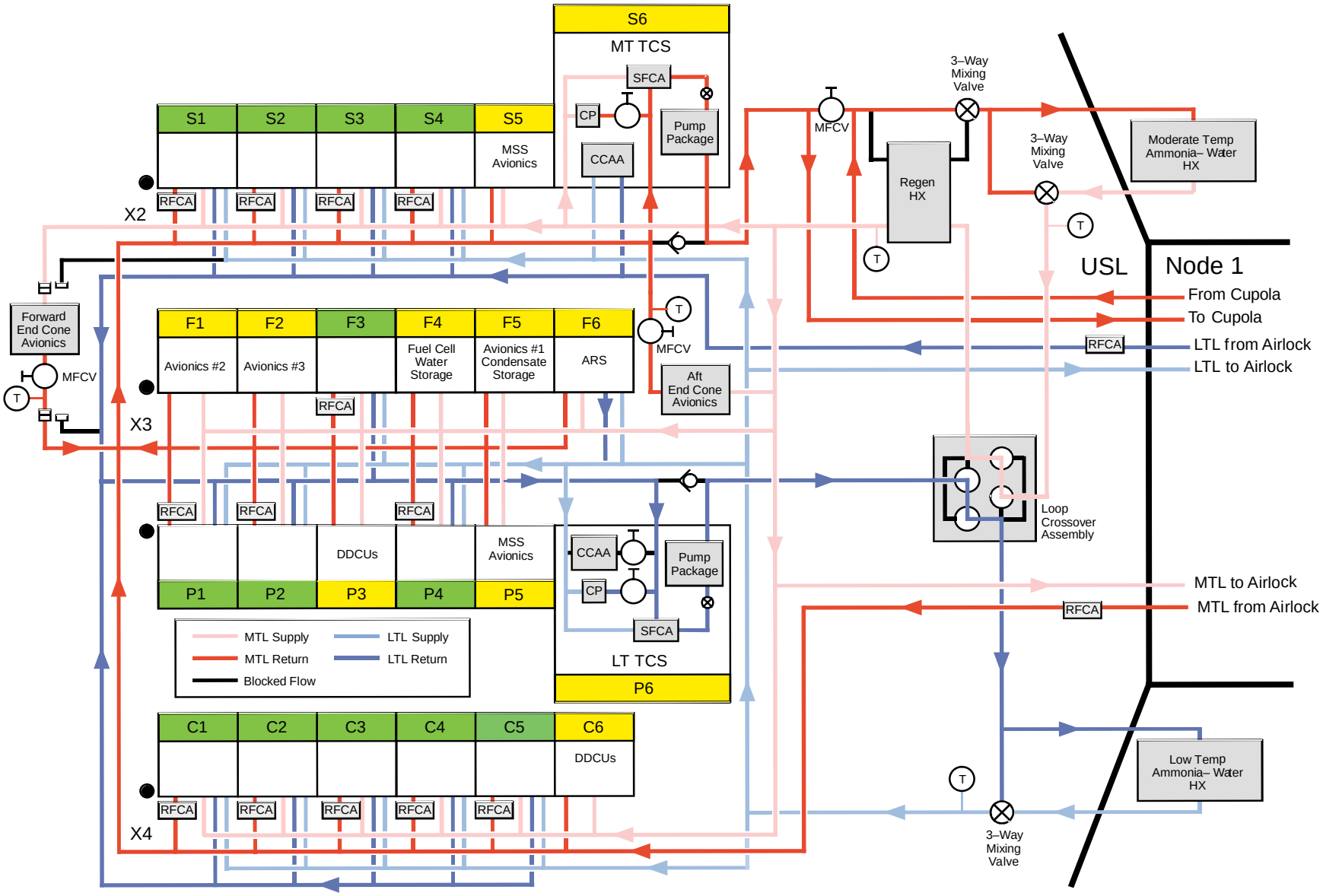

FIGURE 4.6.3–1 SIMPLIFIED USL ITCS

4.6.4 JEM INTERNAL THERMAL CONTROL SYSTEM

The JEM Internal Active Thermal Control System (IATCS) consists of a single closed water cooling loop (including pumps, heat exchangers, valves, and plumbing) which absorbs heat generated from within JEM's Subsystem Payloads and transports it to NODE 2, where it is transferred to a heat exchanger and, subsequently, radiated into space. A functional schematic of the JEM IATCS is shown in Figure 4.6.4–1.

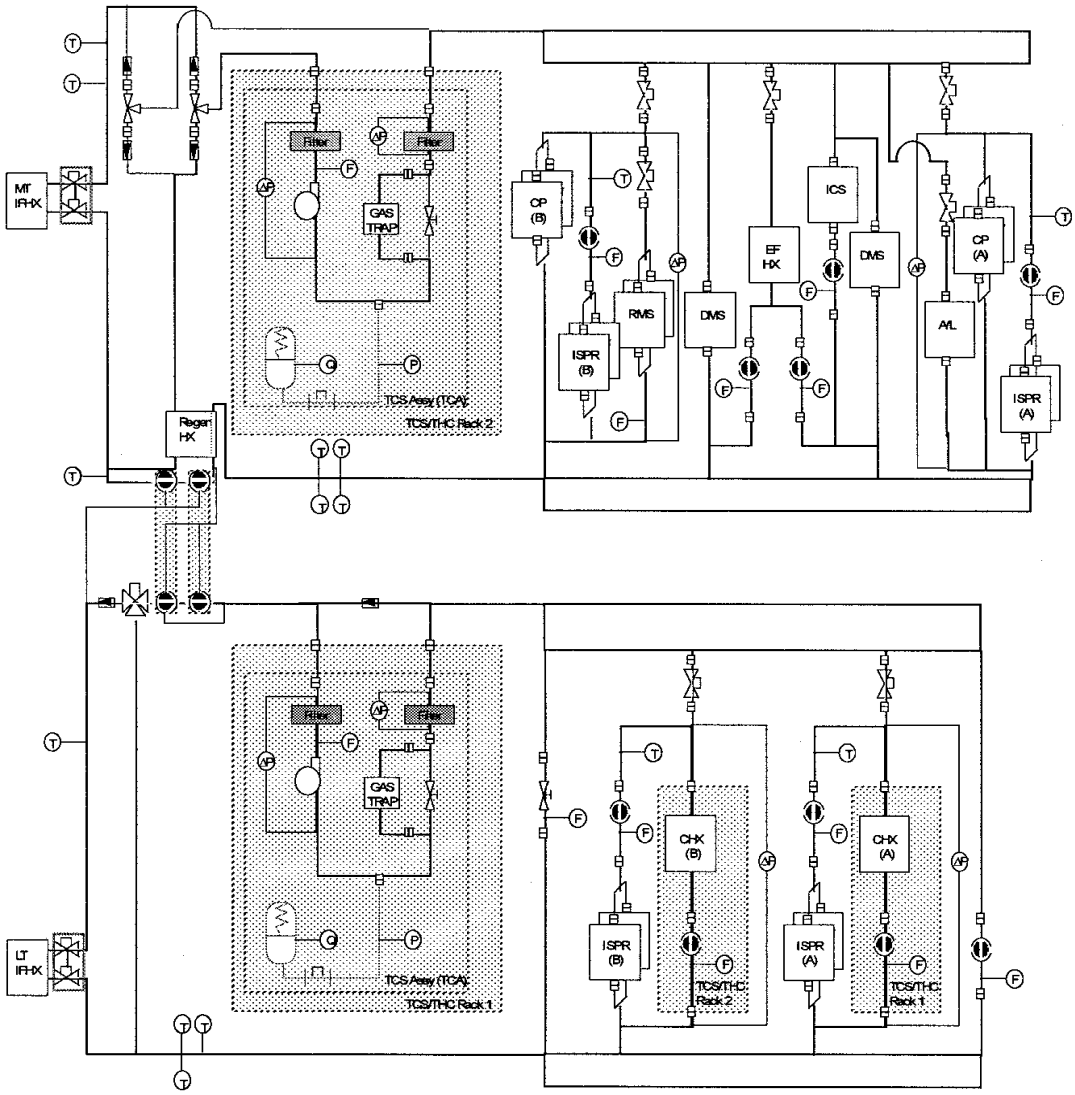

FIGURE 4.6.4–1 JEM IATCS FUNCTIONAL SCHEMATIC

The Pressurized Module (PM) IATCS has a Low Temperature Coolant Supply Loop and a Moderate Temperature Coolant Supply Loop. Under normal operating conditions the Low Temperature Coolant Supply Loop and Moderate Temperature Coolant Supply Loop operate independently. Should a fault develop in a pump or TCS assembly controller, however, the

configuration will be changed so that either pump can circulate the coolant in a single–loop configuration.

The JEM PM has 10 locations for International Standard Payload Racks (ISPRs). Five are allocated to NASDA payloads and five to NASA payloads. The JEM PM provides the same interfaces to the ISS resources as the USL.

4.6.5 APM INTERNAL THERMAL CONTROL SYSTEM

The APM IATCS consists of a single water loop for the collection and transportation of waste heat from the payloads, Cabin Heat Exchanger (CHX) and subsystem water cooled equipment.

The waste heat is transferred to the ISS–NODE 2 Ammonia loops through the moderate temperature and low temperature thermal busses by means of two heat exchangers connected in series.

The water loop user interfaces (payloads and equipment) are all configured in parallel in a plenum arrangement in such a way as to provide each user with similar temperature and pressure conditions. On/Off valves are used to establish or cut off the coolant flow to each payload.

A water modulating pump is used to provide the required flow rate to the plenum users, regulating its speed in such a way as to maintain the plenum pressure drop within a predetermined range.

A three–way modulating valve controls the plenum inlet temperature in the required range by mixing the warm water flow coming from the pump outlet (bypassing the ammonia/water heat exchanger) with the water flow from the CHX outlet. Another three–way modulating valve controls the CHX inlet temperature in the required range by mixing the warm water flow coming from the pump outlet (bypassing the ammonia/water heat exchanger) with cold flow coming from the low temperature ammonia/water heat exchanger outlet.

A functional schematic of the APM IATCS is shown Figure 4.6.5–1.

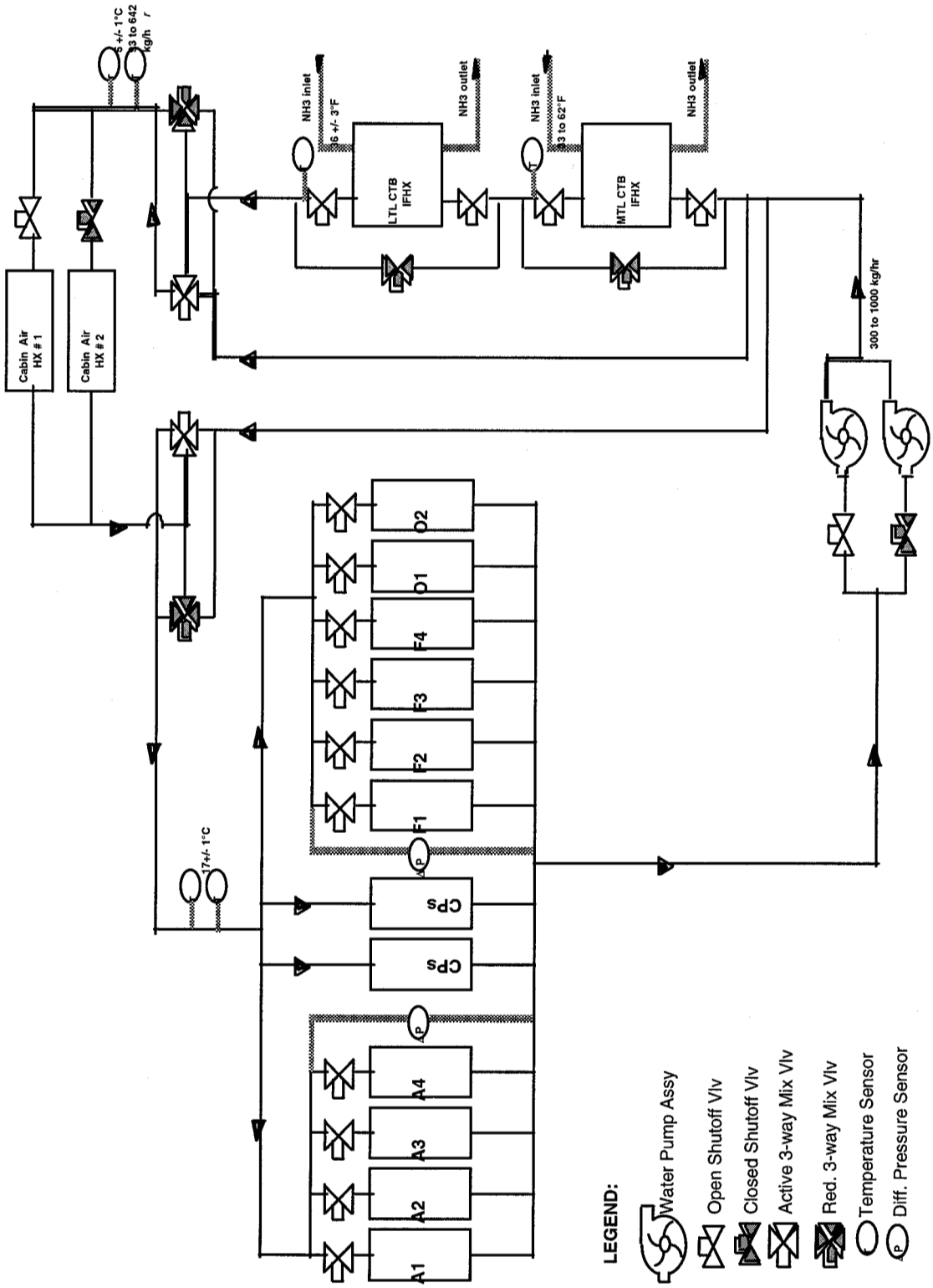

FIGURE 4.6.5–1 APM IATCS FUNCTIONAL SCHEMATIC

4.6.6 CAM INTERNAL THERMAL CONTROL SYSTEM

[TBD #13]

4.6.7 MPLM

The MPLM is used to resupply and return ISS cargo requiring a pressurized environment. To accomplish this, the MPLM is compatible with the active cooling provided by the Orbiter, ISS, and ground support equipment. No active conditioning is planned for the MPLM when it is attached to Node 1; however, it is actively conditioned when attached to Node 2. The heat sources of the MPLM are listed below.

The MPLM heat sources are:

(1) Refrigerator/Freezers (5)

(2) MDM (1)

(3) Pump Dissipation

(4) Cabin Environment

(5) Power Distribution Box (PDB)

(6) Heater Control (HC) Unit

(7) Lights

(8) Shell heaters or solar heating of the shell.

ATCS fluid services are provided by hard lines and flexible lines, both with 0.5 inch outside diameter.

Table 4.6.7–I presents the MPLM ATCS constraints and requirements.

TABLE 4.6.7–I MPLM ATCS CONSTRAINTS AND REQUIREMENTS

Design Requirements	
Lifetime	10 Years and 25 Flights
Racks	5 Refrigerator/Freezer
Water Flowrate	450 to 500 lb/hr
Maximum Heat Load	3250 W
Inlet Temperature	35 °F to 45 °F
Outlet Temperature	35 °F to 70 °F
TCS Equipment	Non Propagation of Failures
Maximum Design Pressure	210 psia
Operating Range on Station	18 to 100 psia
MPLM Pressure Drop	6 psid
TCS Weight	250 kg
Heater Power	732 W @ 110 V On–Station 750 W @ 24 V In Orbiter
Skin Contact	
Continuous	45 °F to 113 °F
Incidental	39 °F to 120 °F
Operating Pressure	100 psi
Water Loop Volume	1.0 ft^3

4.6.7.1 MPLM ATCS DESCRIPTION

The MPLM ATCS is a single phase water loop designed to support cold conditioned cargo transportation to and from the ISS. The MPLM ATCS is required to work for the mission duration, from Pre–Launch to Post–Landing, with few short interruptions, and configuration changes to comply with the different fluidic interfaces. The interruptions in the MPLM ATCS operation will include orbiter ascent and descent, and repositioning from the orbiter bay to the ISS. Table 4.6.7.1–I defines the maximum thermal loads supported for all MPLM mission phases. Table 4.6.7.1–II presents the maximum duration supported for all MPLM mission phases. Note that the MPLM will not be operated 3 hours after launch and 4 hours before landing.

A Water Pump Package (WPP) is installed to provide water circulation when the MPLM is in the cargo bay. Water circulation is provided by ISS pumps when the MPLM is attached to the ISS and by the Ground Support Equipment (GSE) for pre–launch and post landing. The MPLM cooling configurations are presented in Table 4.6.7.1–III.

Figures 4.6.7.1–1, 4.6.7.1–2 and 4.6.7.1–3 show schematics of the various cooling configurations.

TABLE 4.6.7.1–I MPLM MAXIMUM THERMAL LOADS

Mission Phase	Max. Cont. Heat Rejection kW
Pre–launch	
Orbiter Powered Down	3.25
Orbiter Powered Up	3.25
Ascent (No MPLM Operation)	0
On–Orbit (with Rad Kit)	3.25
Descent (No MPLM operation)	0
Post–landing	
MPLM (Ground Powered) Orbiter Powered Down	3.25
Orbiter Powered Up	3.25

TABLE 4.6.7.1–II MPLM MISSION PHASE MAXIMUM DURATION

Phase	Duration (hrs)
Pre–Launch on PAD (Doors Closed)	80
Launch/Ascent	3
MPLM Operations in Cargo Bay (Doors Open)	162.5
MPLM Deployment to ISS	10
MPLM Activation/On Station Operations	280.5
MPLM Retrieval from ISS	10
MPLM Operations in Cargo Bay (Doors Open)	162.5
Descent	7.7
Post–Landing	144

TABLE 4.6.7.1–III MPLM COOLING CONFIGURATIONS

Phase	On/Off Valve Status	WPP Status	ATCS Status	Schematic
Pre–Launch	Open	On	On	Figure 4.6.7.1–1
Cargo Bay Doors Closed	Open	Off–Not Isolated	Off	–
Cargo Bay Doors Open	Open	On	On	Figure 4.6.7.1–2
Deployment	Open	Isolated	Off	–
On Station	Closed	Isolated		Figure 4.6.7.1–3
Retrieval	Open	Off–Not Isolated	Off	–
Cargo Bay Doors Closed	Open	Off–Not Isolated	Off	–
Post–Landing	Open	On	On	Figure 4.6.7.1–1

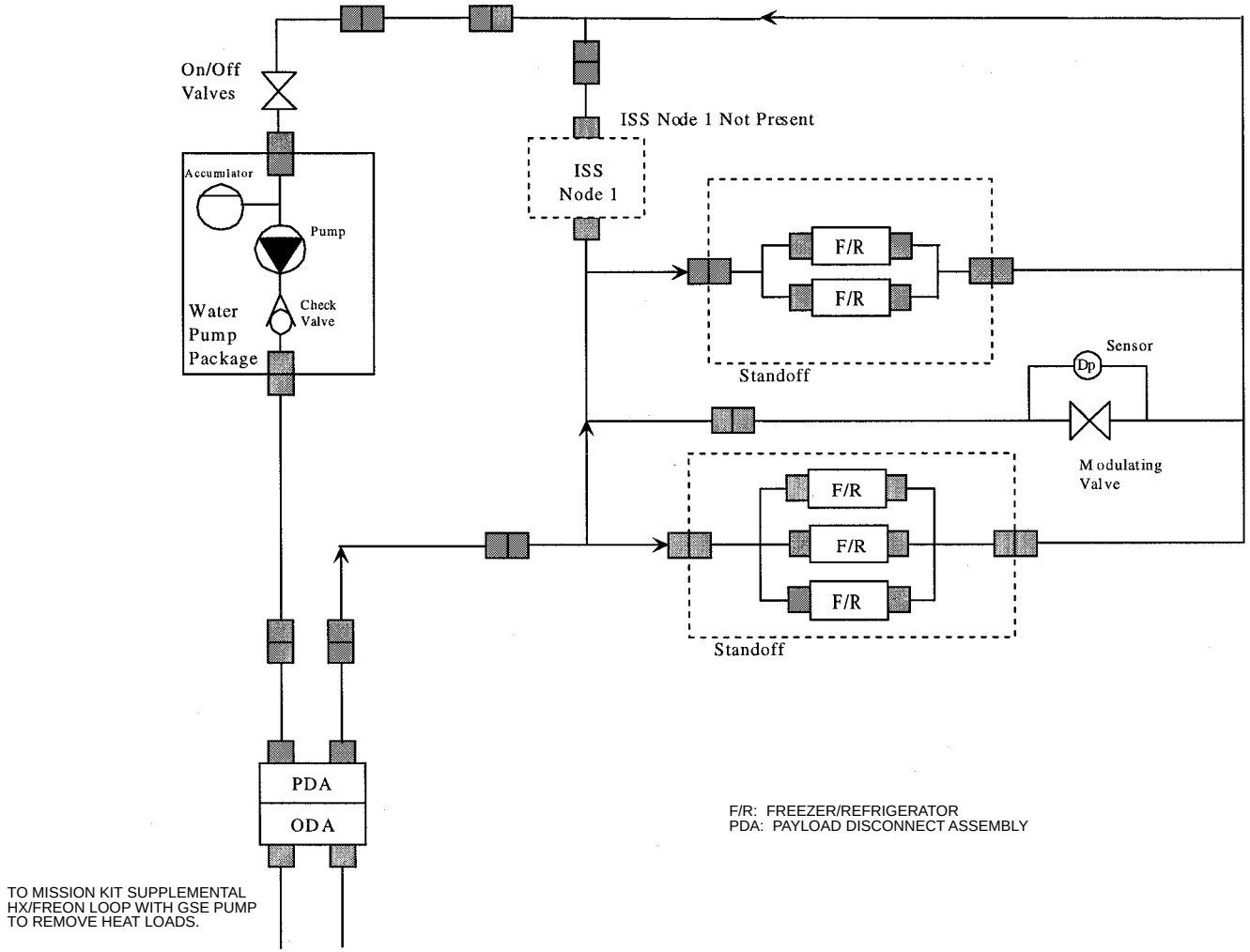

FIGURE 4.6.7.1–1 GROUND SUPPORT COOLING CONFIGURATION OF THE MPLM

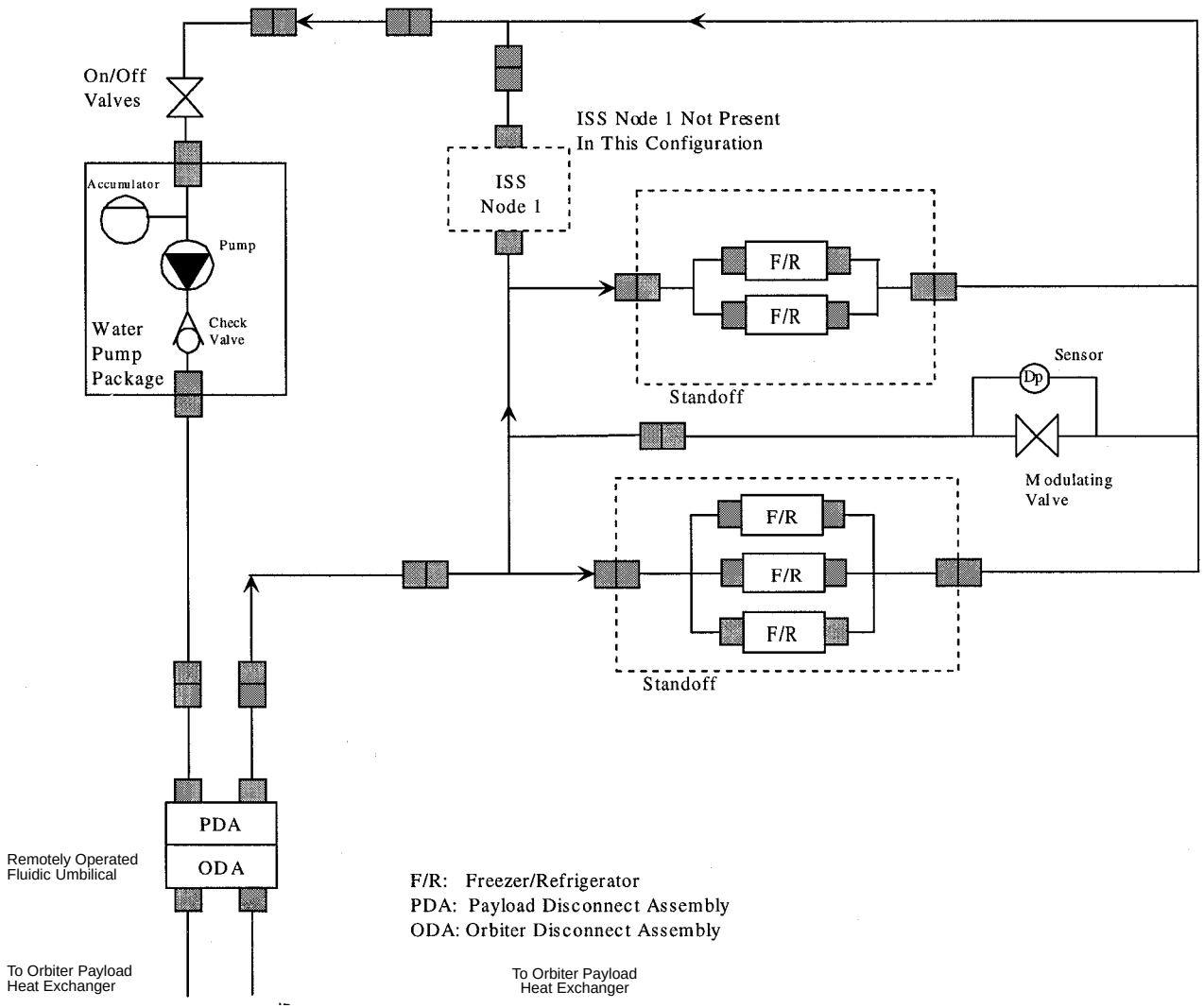

FIGURE 4.6.7.1–2 CARGO BAY COOLING CONFIGURATION OF THE MPLM

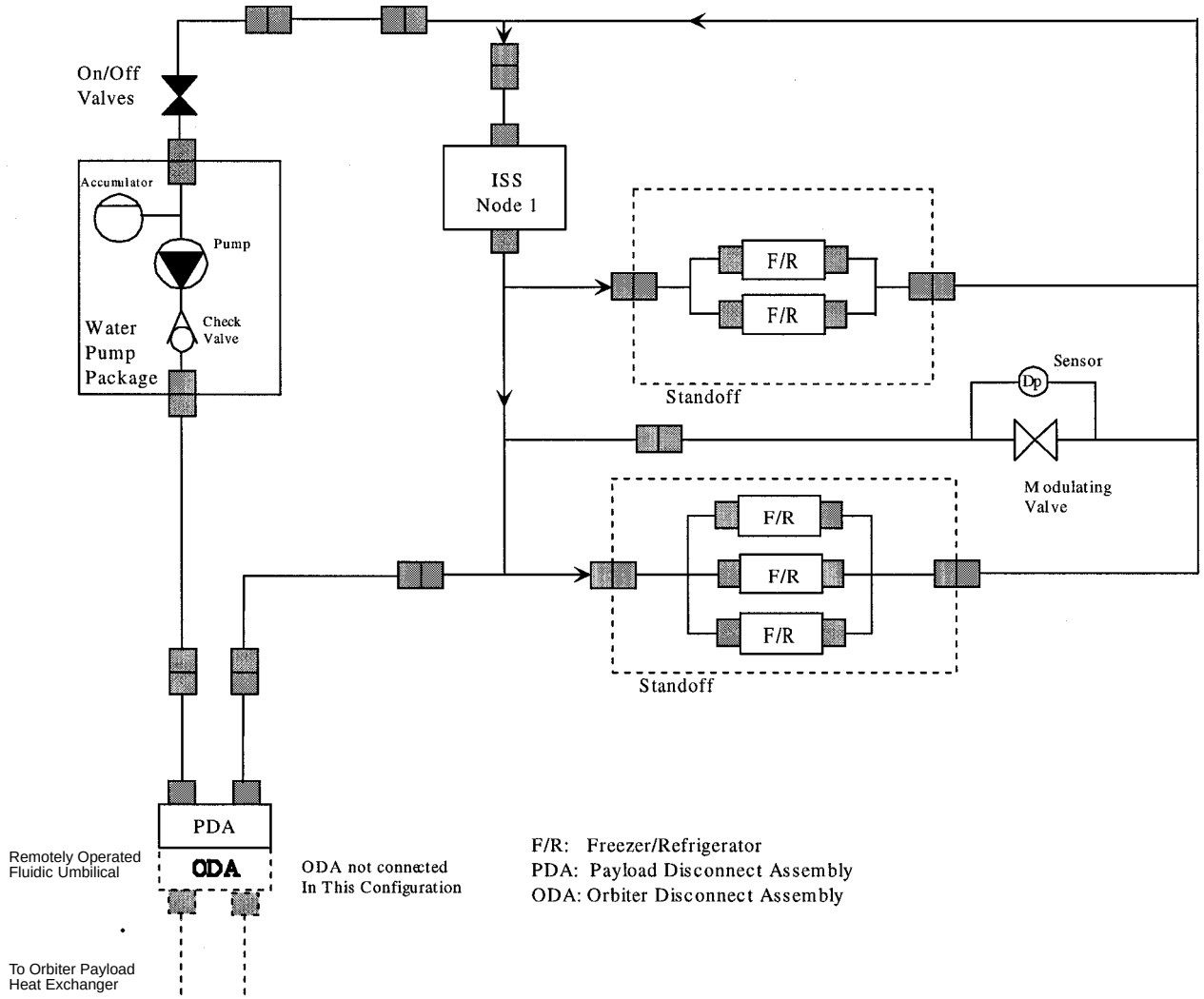

FIGURE 4.6.7.1–3 ON–ORBIT COOLING CONFIGURATION OF THE MPLM

4.6.7.2 MPLM PASSIVE DESIGN

Passive system is designed to withstand a micro–meteoroid strike and to provide thermal protection from the external environment by minimizing the heat leak/gain and to prevent water from freezing and condensation.

To accomplish the requirements of the passive design, the following is done:

A Multi–Layered Insulation (MLI) is placed between the micro–meteoroid shield and the pressure shell. The MLI blanket is 20 layers of double aluminized Kapton foils with Dacron net separators, fixed with ball fasteners, double buttons, or Velcro straps.

B Foam insulation blankets are used to prevent vapor condensation on cold surfaces. Isotherm–K is the baseline foam insulation material. This material is resistant to flames, toxicity, odor, out–gassing, moisture, and fungus. The insulation thickness is 0.8 inches.

C The external thermo–optical coatings must survive micro–meteoroid impacts, atomic oxygen, ultraviolet radiation, and ionizing radiation. The MPLM optical thermal characteristics for absorptivity and emissivity are 0.36 and 0.32 respectively.

D Insulators and isolators are included at the structural interfaces.

E Electrical heaters are located on the pressure shell to prevent water freezing and condensation on the walls of the MPLM. Heaters are also located on the Payload Disconnect Assembly (PDA) to avoid water freezing outside the shell.

4.7 ENVIRONMENTS

4.7.1 ENVIRONMENTAL CONTROL AND LIFE SUPPORT (ECLS)

4.7.1.1 PRESSURIZED GASES

4.7.1.1.1 NITROGEN

Pressurized nitrogen is a common utility provided at all ISPR locations in the USL, JEM, and APM. It is also provided to the Life Sciences Glovebox and Refrigerator/Freezer locations in the CAM.

Nitrogen is considered part of the Atmosphere Control and Supply (ACS) subsystem, see Table 4.7.1.1.1–I and Figures 4.7.1.1.1–1 and 4.7.1.1.1–2. It is stored at 20.7 MPa (3000 psia) in two tanks on the outside of the Airlock, each with a volume of 425 L (15 ft^3). The tanks are refilled through high pressure nitrogen lines from the nitrogen reserves of a docked space shuttle each flight. A reserve of 103 kg (230 lb_m) of nitrogen is maintained in the tanks to allow repressurization of an ISS module in the event of a depressurization due to fire, chemical spill, or other emergency. Payload operations requiring the use of nitrogen will be halted until the next resupply if this lower limit is reached.

The quality of the nitrogen delivered to the shuttle on the ground is specified in Table 4.7.1.1.1–II. The shuttle and ISS do not have any special provisions to maintain the quality of the nitrogen other than general fluid and tank cleanliness requirements for manned space flight. The experiment or payload that has a need to preclude contaminants from the nitrogen will have to make the appropriate provisions in the experiment or payload design.

The nitrogen supplied to ISPRs passes through a two stage regulator which controls the pressure to be in the range of 0.689 to 0.758 MPa (100 to110 psia). There is a relief valve that will keep the pressure from exceeding the maximum design pressure of 1.38 MPa (200 psia). The operating pressure and temperature ranges at the ISPR interface are 517 to 827 kPa (75 to 120 psia) and 15.5 °C to 45 °C (60 °F to 113 °F). The lower limit on the pressure accounts for pressure losses down the nitrogen distribution lines from the regulator to the ISPR location.

The nitrogen interface is a category 8, B–keyed, manual quick disconnect. The male half of the quick disconnect is provided at the UIP. It also contains a check valve to prevent backflow of nitrogen from the ISPR. The nitrogen system does not control or measure flow rate. The payload has the responsibility to provide on/off control of the nitrogen flow and to ensure that the flow rate does not exceed the maximum allowable flow of 5.43 kg/hr (12 lbm/hr) while in the specified pressure range.

Payloads and experiments considering the use of nitrogen should limit their designs to a use of no more than 5 lb_m per 90 days. This value should not be considered a hard limit. It is provided to give the designer or Payload Integrator an idea of the nitrogen availability. The actual needs of the payload will be recorded in the Payload Integration Agreement and negotiated during the planning stages of the payload or experiment.

TABLE 4.7.1.1.1–I ATMOSPHERE CONTROL AND SUPPLY LEGEND

	Self-Sealing Quick Disconnect, Half		Relief Valve
	Self-Sealing Quick Disconnect, Half with Check Valve		Tank
	Flex Hose		Manual Valve
	Feedthrough		Motor Valve with position indication
	Mechanical Fitting, Half		Motor Valve with manual override and position indication
	Manual Valve with manual interfaces on both sides and fluid interface		Pump
	Pressure Sensor		Burst Disk
	Solenoid Valve with manual override and position indication		Diffuser
	Non-propulsive Vent		Orifice
CPS	Cabin Pressure sensor		Heater
VAJ	Vacuum Access Jumper		Muffler
FC	Firmware Controller		Temperature sensor
PCP	Pressure Control Panel Subassembly		Oxygen
VRV	Vent Relief Subassembly		Nitrogen
PCA	Pressure Control Assembly		Recharge Oxygen
NIA	Nitrogen Interface Assembly		Recharge Nitrogen
	Check Valve		Hydrogen
	Pressure Regulator		Oxygen Generator scar for hydrogen into the water vent

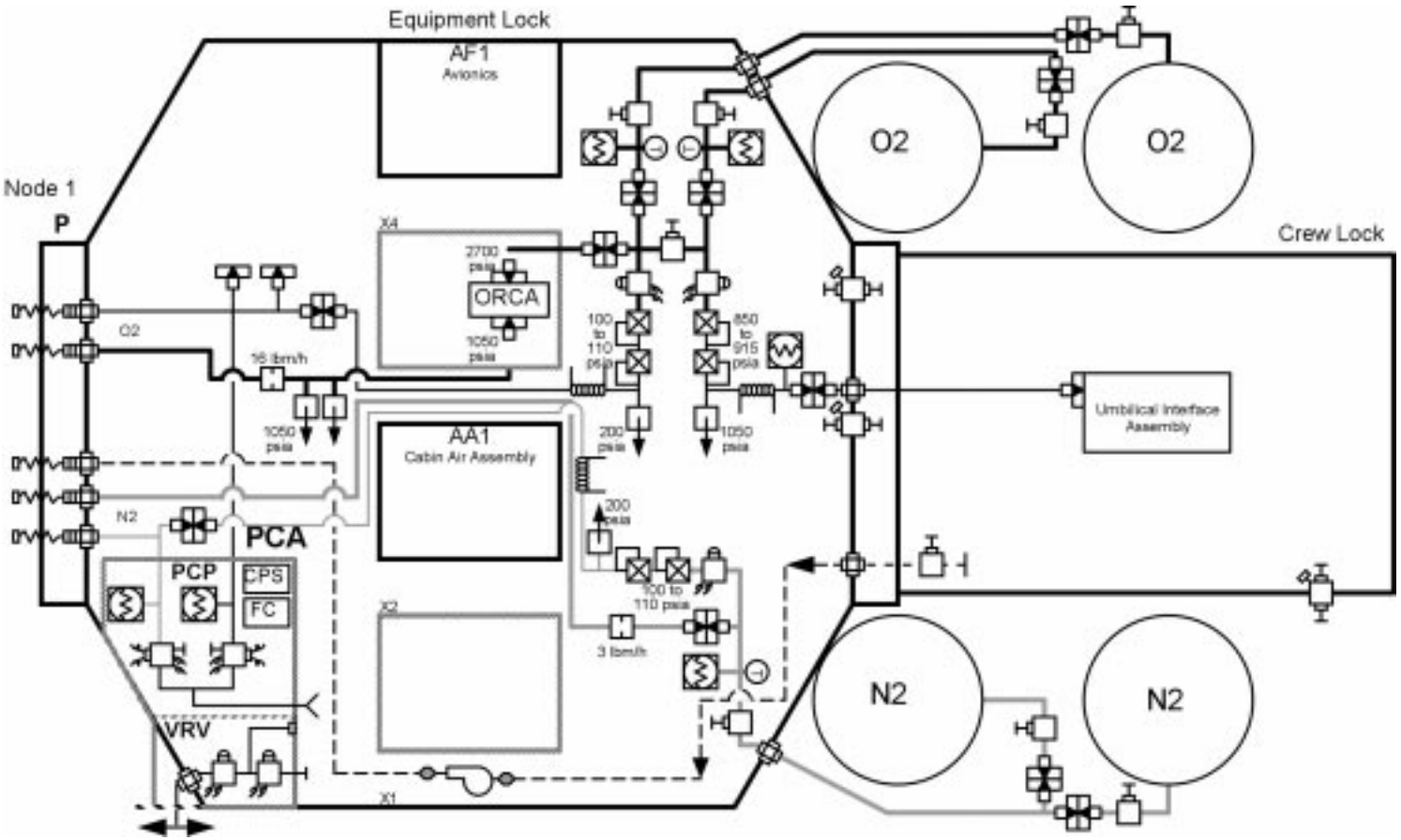

FIGURE 4.7.1.1.1–1 AIRLOCK ACS SCHEMATIC SHOWING PRESSURIZED NITROGEN AND OXYGEN SUBSYSTEMS

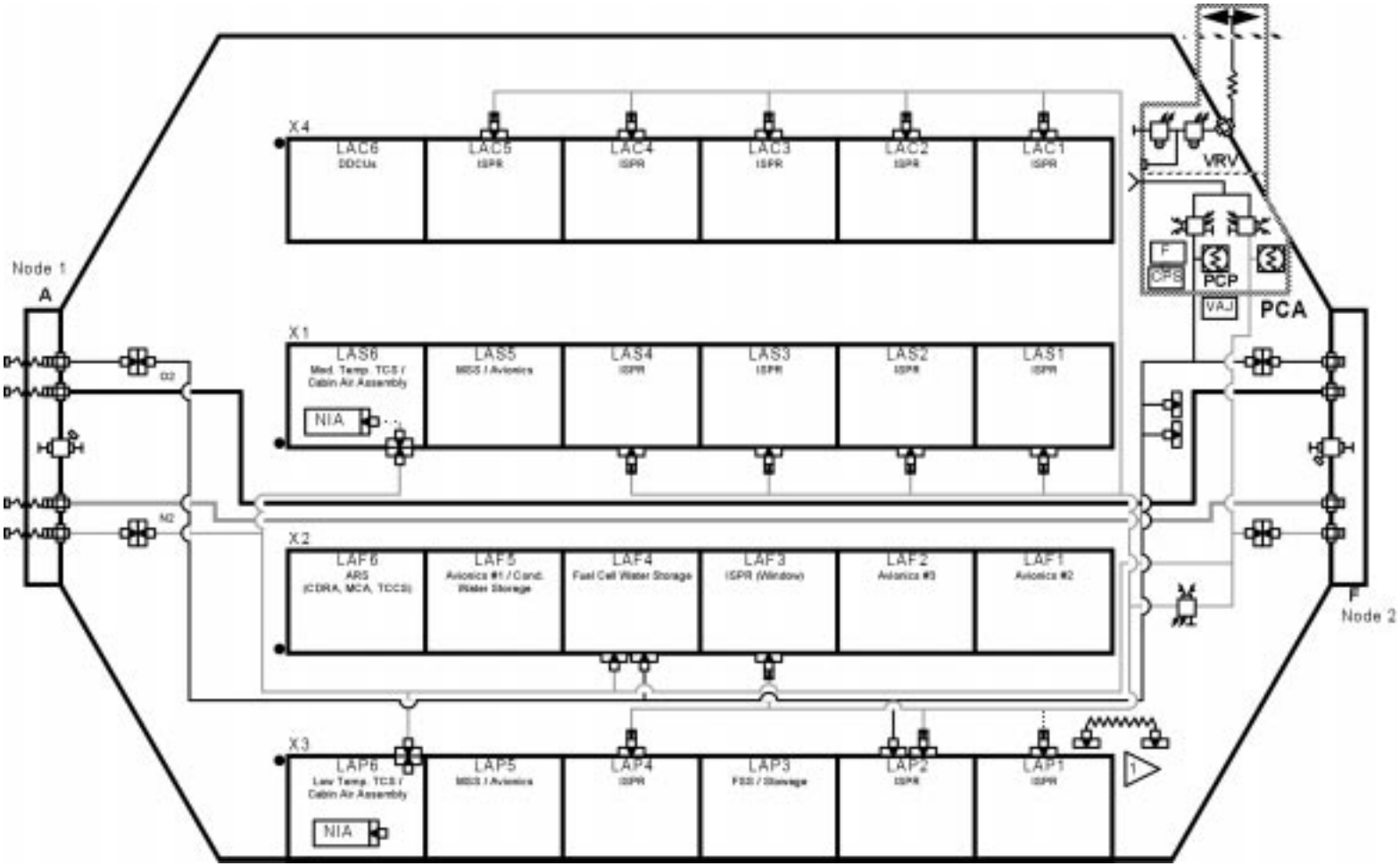

FIGURE 4.7.1.1.1–2 USL ACS CHEMATIC SHOWING THE NITROGEN AND OXYGEN SUBSYSTEMS

The chemical compounds listed in the following Trace Contaminant Tables represent the 126 contaminants expected on ISS and 10 contaminants that were found in measurable quantities on Shuttle missions. The 126 expected compounds are those used in the computer modeling of ISS air quality.

TABLE 4.7.1.1.1–II TRACE CONTAMINANTS
(Page 1 of 8)

Common Name	IUPAC/Accepted Name	ISS(1)		Shuttle Bottle (2)		Modeled Values(3)	
		SMAC (mg/m^3)	90% SMAC (mg/m^3)	Maximum (mg/m^3)	Mean (mg/m^3)	Nominal (mg/m^3)	Extreme (mg/m^3)
methyl alcohol	methanol	9.000	8.100	0.5340	0.0351	0.6557	0.6557
ethyl alcohol	ethanol	2,000.000	1,800.000	21.1570	2.8488	3.3220	3.7510
allyl alcohol	2–propen–1–ol	1.000	0.900	0.0000	0.0000	0.0004	0.0004
n–propyl alcohol	1–propanol	98.000	88.200	0.9800	0.0141	0.0449	0.0449
isopropyl alcohol	2–propanol	150.000	135.000	16.0000	2.0320	0.7549	0.7549
ethylene glycol	1,2–ethanediol	13.000	11.700	0.0950	0.0010	0.0000	0.0000
n–butyl alcohol	1–butanol	80.000	72.000	0.5100	0.0308	0.9467	0.9467
tert–butyl alcohol	2–methyl–2–propanol	120.000	108.000	2.2470	0.0381	0.0148	0.0148
isobutyl alcohol	2–methyl–1–propanol	120.000	108.000	0.0340	0.0003	0.1550	0.1550
sec–butyl alcohol	2–butanol	120.000	108.000	0.0000	0.0000	0.0017	0.0017
n–amyl alcohol	1–pentanol	130.000	117.000	0.0000	0.0000	0.0309	0.0309
carbolic acid	phenol	7.700	6.930	0.0000	0.0000	0.0058	0.0058
hexahydrophenol	cyclohexanol	120.000	108.000	NA	NA	0.1542	0.1542
sec–hexyl alcohol	2–hexanol	170.000	153.000	0.0000	0.0000	0.0005	0.0005
formaldehyde	methanal	0.050	0.045	0.0000	0.0000	0.0000	0.0000
acetaldehyde	ethanal	4.000	3.600	4.7240	0.1684	0.0759	0.0761
acrolein	2–propenal	0.030	0.027	0.0250	0.0005	0.0007	0.0011
propionaldehyde	propanal	95.000	85.500	0.5870	0.0198	0.0646	0.1333
n–butylaldehyde	butanal	120.000	108.000	0.4640	0.0135	0.1743	0.1743

TABLE 4.7.1.1.1–II TRACE CONTAMINANTS
(Page 2 of 8)

Common Name	IUPAC/Accepted Name	ISS(1)		Shuttle Bottle (2)		Modeled Values(3)	
valeraldehyde	pentanal	110.000	99.000	0.5100	0.0093	0.0278	0.0278
		SMAC (mg/m^3)	90% SMAC (mg/m^3)	Maximum (mg/m^3)	Mean (mg/m^3)	Nominal (mg/m^3)	Extreme (mg/m^3)
benzenecarbonal	benzaldehyde	173.000	155.700	0.0160	0.0003	0.0040	0.0040
acetone	2–propanone	50.000	45.000	15.7900	0.8277	0.7297	0.9342
methyl ethyl ketone	2–butanone	30.000	27.000	0.5040	0.0529	0.9430	0.9430
methyl propyl ketone	2–pentanone	70.000	63.000	0.0250	0.0003	0.0008	0.0008
methyl isopropyl ketone	3–methyl–2–butanone	70.000	63.000	0.0000	0.0000	0.0064	0.0064
pimelic ketone	cyclohexanone	60.000	54.000	0.4050	0.0007	0.1305	0.1305
methyl isobutenyl ketone (mesityl oxide)	4–methyl–1–penten–3–one	40.000	36.000	0.0000	0.0000	0.0388	0.0388
methyl isobutyl ketone	4–methyl–2–pentanone	140.000	126.000	0.0100	0.0002	0.2839	0.2839
acetylbenzene	acetophenone	250.000	225.000	0.0000	0.0000	0.0001	0.0001
methyl hexyl ketone	2–octanone	100.000	90.000	NA	NA	0.0000	0.0000
diisobutyl ketone	2,6–dimethyl–4–heptanone	58.000	52.200	NA	NA	0.0007	0.0007
methane	methane	3,800.000	3,420.000	170.0000	40.0200	28.0900	35.2800
ethylene	ethene	340.000	306.000	NA	NA	0.0002	0.0002
ethane	ethane	1,200.000	1,080.000	NA	NA	0.0008	0.0008
propylene	propene	860.000	774.000	0.0000	0.0000	0.0012	0.0017
propane	propane	900.000	810.000	0.0000	0.0000	0.0002	0.0003
bivinyl	1,3–butadiene	0.130	0.117	0.0000	0.0000	0.0005	0.0005
a–butylene	1–butene	460.000	414.000	1.5630	0.0156	0.0164	0.0164
butane	butane	240.000	216.000	0.0000	0.0000	0.0010	0.0010
isobutane	2–methylpropane	240.000	216.000	NA	NA	0.0022	0.0022
propylethylene	1–pentene	190.000	171.000	0.0000	0.0000	0.0000	0.0000

TABLE 4.7.1.1.1–II TRACE CONTAMINANTS
(Page 3 of 8)

Common Name	IUPAC/Accepted Name	ISS(1)		Shuttle Bottle (2)		Modeled Values(3)	
pentane	pentane	590.000	531.000	0.2150	0.0041	0.0195	0.0195
isopentane	2–methylbutane	300.000	270.000	NA	NA	0.0004	0.0004
		SMAC (mg/m^3)	90% SMAC (mg/m^3)	Maximum (mg/m^3)	Mean (mg/m^3)	Nominal (mg/m^3)	Extreme (mg/m^3)
methylpentamethylene	methylcyclopentane	52.000	46.800	1.9010	0.0260	0.0061	0.0061
hexamethylene	cyclohexane	210.000	189.000	0.4390	0.0082	0.0774	0.0774
neohexane	2,2–dimethylbutane	88.000	79.200	0.0000	0.0000	0.0003	0.0003
diethylmethylmethane	3–methylpentane	1,800.000	1,620.000	0.4860	0.0049	0.0012	0.0012
hexane	hexane	180.000	162.000	1.3620	0.0152	0.0142	0.0142
methylhexamethylene	methylcyclohexane	60.000	54.000	0.0000	0.0000	0.0124	0.0124
heptylene	1–heptene	200.000	180.000	NA	NA	0.0000	0.0000
heptane	heptane	200.000	180.000	0.4460	0.0063	0.0114	0.0114
dimethylcyclohexane	1,1–dimethylcyclohexane	120.000	108.000	NA	NA	0.0053	0.0053
trans–1,2–dimethylhexame-thylene	trans–1,2–dimethylcyclo-hexane	120.000	108.000	0.0000	0.0000	0.0107	0.0107
octane	octane	350.000	315.000	0.4950	0.0050	0.0033	0.0033
nonane	nonane	320.000	288.000	0.3680	0.0073	0.0015	0.0015
citrene (limonene)	4–isopropyl–1–methylcy-clohexene	0.100	0.090	0.1240	0.0013	0.0007	0.0007
decane	decane	230.000	207.000	0.6700	0.0067	0.0057	0.0057
hendecane	undecane	320.000	288.000	0.0000	0.0000	0.0051	0.0051
dodecane	dodecane	280.000	252.000	0.0000	0.0000	0.0001	0.0001
phene	benzene	0.200	0.180	0.1000	0.0045	0.0051	0.0051
toluene	methylbenzene	60.000	54.000	63.8770	1.1470	0.4043	0.4043
styrene	ethenylbenzene	43.000	38.700	0.0000	0.0000	0.0064	0.0064

TABLE 4.7.1.1.1–II TRACE CONTAMINANTS
(Page 4 of 8)

Common Name	IUPAC/Accepted Name	ISS(1)		Shuttle Bottle (2)		Modeled Values(3)	
o–xylene	1,2–dimethylbenzene	220.000	198.000	2.0940	0.0429	0.1135	0.1135
m–xylene	1,3–dimethylbenzene	220.000	198.000	4.3240	0.0763	0.4145	0.4145
p–xylene	1,4–dimethylbenzene	220.000	198.000	0.4620	0.1070	0.2205	0.2205
		SMAC (mg/m^3)	90% SMAC (mg/m^3)	Maximum (mg/m^3)	Mean (mg/m^3)	Nominal (mg/m^3)	Extreme (mg/m^3)
ethylbenzene	ethylbenzene	130.000	117.000	1.0430	0.0195	0.0306	0.0306
methylethenylbenzene	a–methylstyrene	140.000	126.000	0.0000	0.0000	0.0000	0.0000
mesitylene	1,3,5–trimethylbenzene	15.000	13.500	0.0000	0.0000	0.0007	0.0007
pseudocumene	1,2,4–trimethylbenzene	15.000	13.500	0.0000	0.0000	0.0092	0.0092
propylbenzene	propylbenzene	49.000	44.100	0.1550	0.0040	0.0439	0.0439
cumene	isopropylbenzene	74.000	66.600	0.0000	0.0000	0.0029	0.0029
ethylmethylbenzene	1–ethyl–2–methylbenzene	25.000	22.500	0.0000	0.0000	0.0010	0.0010
methyl chloride	chloromethane	41.000	36.900	0.1300	0.0066	0.0057	0.0057
vinyl chloride	chloroethene	3.000	2.700	0.0000	0.0000	0.0006	0.0012
ethyl chloride	chloroethane	260.000	234.000	0.0000	0.0000	0.0000	0.0000
methylene chloride	dichloromethane	10.000	9.000	4.2800	0.3585	1.6340	1.8130
Freon 22	chlorodifluoromethane	350.000	315.000	NA	NA	0.0514	0.0520
dichloroethene	1,1–dichloroethene	7.900	7.110	0.0190	0.0003	0.0001	0.0001
ethylene dichloride	1,2–dichloroethane	1.000	0.900	0.1000	0.0010	0.0158	0.0158
Freon 21	dichlorofluoromethane	21.000	18.900	0.0280	0.0003	0.0001	0.0001
propylene chloride	1,2–dichloropropane	42.000	37.800	0.0250	0.0003	0.0015	0.0015
chlorophene	chlorobenzene	46.000	41.400	0.0000	0.0000	0.3145	0.3145
chlorotrifluoroethane	1–chloro–1,2,2–trifluoroethane	480.000	432.000	NA	NA	0.0010	0.0010
chloroform	trichloromethane	4.900	4.410	0.0570	0.0011	0.0036	0.0036

TABLE 4.7.1.1.1–II TRACE CONTAMINANTS
(Page 5 of 8)

Common Name	IUPAC/Accepted Name	ISS(1)		Shuttle Bottle (2)		Modeled Values(3)	
Freon 12	dichlorodifluoromethane	490.000	441.000	0.4600	0.0339	0.0028	0.0053
trichloroethylene	trichloroethene	10.000	9.000	0.0120	0.0003	0.0176	0.0176
dichlorodifluoroethylene	1,2–dichloro–1,2–difluoroe-thene	140.000	126.000	NA	NA	0.0004	0.0004
		SMAC (mg/m^3)	90% SMAC (mg/m^3)	Maximum (mg/m^3)	Mean (mg/m^3)	Nominal (mg/m^3)	Extreme (mg/m^3)
methyl chloroform	1,1,1–trichloroethane	160.000	144.000	0.7890	0.0630	0.1372	0.1372
vinyl trichloride	1,1,2–trichloroethane	0.100	0.090	0.0000	0.0000	0.0000	0.0000
Freon 11	trichlorofluoromethane	560.000	504.000	0.6870	0.0188	0.2880	0.3786
dichlorobenzene	1,2–dichlorobenzene	30.000	27.000	0.0000	0.0000	0.0013	0.0013
Halon 1301	bromotrifluoromethane	11,000.000	9,900.000	43.0000	1.1688	0.2356	0.2361
carbon tetrachloride	tetrachloromethane	13.000	11.700	0.0000	0.0000	0.0020	0.0020
tetrachloroethylene	tetrachloroethene	34.000	30.600	0.6650	0.0067	0.1487	0.1487
Freon 114	1,2–dichloro–1,1,2,2–tetra-fluoroethane	700.000	630.000	0.0980	0.0010	0.0054	0.0054
Freon 113	1,1,2–trichloro–1,2,2–tri-fluoroethane	400.000	360.000	41.8000	1.8888	3.8600	3.8600
Freon 112	1,1,2,2–tetrachloro–1,2–di-fluoroethene	830.000	747.000	NA	NA	0.0068	0.0068
ethyl formate	methanoic acid ethyl ester	91.000	81.900	0.0000	0.0000	0.0051	0.0051
methyl acetate	ethanoic acid methyl ester	120.000	108.000	0.0250	0.0011	0.0284	0.0284
ethyl acetate	ethanoic acid ethyl ester	180.000	162.000	0.1540	0.0024	0.0602	0.0602
ethyl cellosolve	2–ethoxyethanol	0.300	0.270	0.0000	0.0000	0.1031	0.1031
methyl methacrylate	2–methyl propenoic acid methyl ester	100.000	90.000	0.0000	0.0000	0.0266	0.0266
propyl acetate	ethanoic acid propyl ester	170.000	153.000	0.0000	0.0000	0.0690	0.0690

TABLE 4.7.1.1.1–II TRACE CONTAMINANTS
(Page 6 of 8)

Common Name	IUPAC/Accepted Name	ISS(1)		Shuttle Bottle (2)		Modeled Values(3)	
isopropyl acetate	ethanoic acid isopropyl ester	210.000	189.000	0.0000	0.0000	0.0012	0.0012
butyl acetate	ethanoic acid butyl ester	190.000	171.000	0.2460	0.0046	0.1520	0.1520
isobutyl acetate	2–methylpropyl acetate	190.000	171.000	0.0000	0.0000	0.0310	0.0310
ethyl lactate	lactic acid ethyl ester	190.000	171.000	NA	NA	0.0007	0.0007
		SMAC (mg/m^3)	90% SMAC (mg/m^3)	Maximum (mg/m^3)	Mean (mg/m^3)	Nominal (mg/m^3)	Extreme (mg/m^3)
n–amyl acetate	pentyl acetate	160.000	144.000	0.0000	0.0000	0.0098	0.0098
cellosolve acetate	2–ethoxyethyl acetate	160.000	144.000	0.6740	0.0067	0.1426	0.1426
furan	1,4–epoxy–1,3–butadiene	0.111	0.100	0.0000	0.0000	0.0004	0.0006
tetrahydrofuran	1,4–epoxybutane	120.000	108.000	0.0000	0.0000	0.0139	0.0139
ether	diethyl ether	240.000	216.000	NA	NA	0.0182	0.0182
sylvan	2–methylfuran	0.130	0.117	0.0000	0.0000	0.0007	0.0007
trimethylsilanol	trimethylsilanol	40.000	36.000	0.2100	0.0037	0.0345	0.0345
hexamethyl cyclotrisiloxane	hexamethyl cyclotrisiloxane	230.000	207.000	2.2000	0.1588	0.0331	0.0331
octamethyl trisiloxane	octamethyl trisiloxane	40.000	36.000	0.0000	0.0000	0.0431	0.0431
acetonitrile	methyl cyanide	6.700	6.030	NA	NA	0.0000	0.0000
indole	2,3–benzopyrrole	0.250	0.225	NA	NA	0.0894	0.0894
carbon oxisulfide	carbonyl sulfide	12.000	10.800	NA	NA	0.0041	0.0041
methyl sulfide	dimethyl sulfide	2.500	2.250	0.5500	0.0055	0.0000	0.0000
carbon disulfide	carbon disulfide	16.000	14.400	0.0090	0.0003	0.0066	0.0168
acetic acid	ethanoic acid	7.400	6.660	0.0300	0.0010	0.0002	0.0002
hydrogen	hydrogen	340.000	306.000	28.0000	5.2148	1.2400	1.2400
ammonia	ammonia	7.000	6.300	0.0000	0.0000	0.3561	0.3561
carbon monoxide	carbon monoxide	10.000	9.000	3.7000	1.0992	2.4720	2.4720

TABLE 4.7.1.1.1–II TRACE CONTAMINANTS
(Page 7 of 8)

Common Name	IUPAC/Accepted Name	ISS(1)		Shuttle Bottle (2)		Modeled Values(3)	
hydrogen sulfide	hydrogen sulfide	2.800	2.520	NA	NA	0.0041	0.0041
decamethyl cyclopentasilox-ane	decamethyl cyclopentasilox-ane	0.100	0.090	6.5000	0.2528		
acetylene	ethyne	530.000	477.000	0.9300	0.0181		
glycol monobutyl ether	2–butoxyethanol	0.100	0.090	0.3000	0.0030		
octamethyl cyclotrisiloxane	octamethyl cyclotrisiloxane	0.100	0.090	0.2170	0.0031		
		SMAC (mg/m^3)	90% SMAC (mg/m^3)	Maximum (mg/m^3)	Mean (mg/m^3)	Nominal (mg/m^3)	Extreme (mg/m^3)
isoprene	2–methyl–1,3–butadiene	560.000	504.000	0.0700	0.0030		
methyl pentyl ketone	2–heptanone	0.100	0.090	0.0520	0.0012		
caproaldehyde	hexanal	0.100	0.090	0.0450	0.0030		
enanthaldehyde	heptanal	0.100	0.090	0.0420	0.0018		
n–decyl alcohol	decanol	0.100	0.090	0.0250	0.0003		

TABLE 4.7.1.1.1–II TRACE CONTAMINANTS
(Page 8 of 8)

Common Name	IUPAC/Accepted Name	ISS(1)		Shuttle Bottle (2)		Modeled Values(3)	
butylbenzene	n–butylbenzene	0.100	0.090	0.0050	0.0001		

The following notes apply to the referenced number on the tables:

(6) SMAC (Spacecraft Maximum Allowable Concentration) values represent the maximum concentration that will not cause adverse health effects, significant discomfort, or degradation in crew performance. The Trace Contaminant Control System (TCCS) requirement for ISS is denoted by the 90% SMAC values. (Ref. JSC–20584)

(7) The Shuttle Bottle concentrations are summaries of 100 evacuated bottle samples collected during the Shuttle program. All Shuttle missions through STS–82 are included, although samples collected while the Shuttle was docked to the *Mir* are not included. Any chemicals that were not analyzed are denoted by NA. (Ref. NASA TP–1998–207978)

(8) Modeled Values are the results of computer modeling for 90 days of continuous TCCS operation. Nominal conditions are 70 °F and 50% relative humidity (RH). Extreme conditions are the maximum anticipated cabin temperature and humidity, 80 °F and 70% RH, and result in the lowest TCCS capacity for contaminant removal. (Ref. Lockheed Engineering memo #TCC–0084B)

The TCCS is not considered the sole contaminant sink in the computer analysis. Additional assumptions are a cabin air leakage rate of 0.7 lb/day and operation of the condensing heat exchangers (CHX). Elimination of leakage and CHX results in one compound, ammonia, exceeding 90% SMAC after 82 days.

Major components of the TCCS are an activated charcoal bed, a catalytic oxidizer, a lithium hydroxide sorbent bed, a blower, a flow meter, and an electronics interface assembly. A schematic diagram for the TCCS is shown in Figure 4.7.1.1.1–3, Trace Contaminant Control System (TCCS) Schematic. Process air flowing into the TCCS is circulated through the charcoal bed to remove high molecular weight contaminants. A blower and flow meter downstream of the charcoal bed control the process air flow through the catalytic oxidizer to 2.7 SCFM. The total system volume flow rate is approximately 9.0 SCFM. After the air stream exits the charcoal bed, blower, and flow meter, a portion is circulated through a high temperature catalytic oxidizer to remove low molecular weight contaminants such as methane, hydrogen, and carbon monoxide. Upon entering the catalytic oxidizer, the air stream is heated to a nominal temperature of 750°F in a regenerable heat exchanger and is passed over a heating element and through a catalyst bed. The regenerable heat exchanger conserves heat within the oxidizer and minimizes the duty cycle of the heating element. As a result, the power required to operate the subassembly is minimized. After exiting the catalytic oxidizer, the air stream is circulated through a lithium hydroxide bed to remove any acid by–products generated in the oxidation process. The processed air is returned to the cabin air Temperature and Humidity Control (THC) return duct.

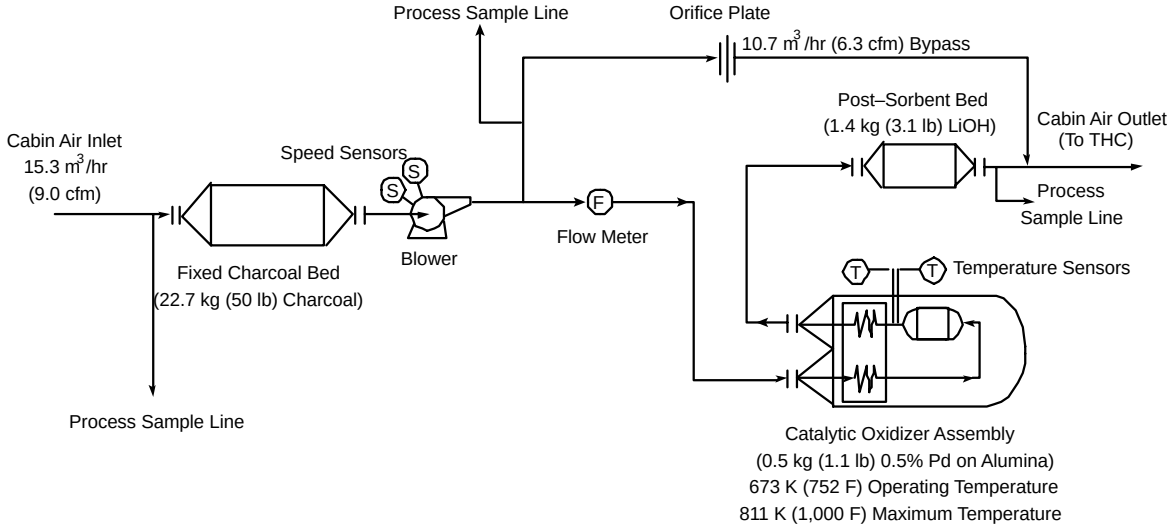

FIGURE 4.7.1.1.1–3 TRACE CONTAMINANT CONTROL SYSTEM (TCCS) SCHEMATIC

The activated charcoal bed contains phosphoric acid impregnated charcoal. The function of this bed is to provide control of high molecular weight contaminants which make up the vast majority of the trace contaminant load. The charcoal bed also removes ammonia by chemisorption with phosphoric acid. The only contaminants not effectively removed by the charcoal bed are low molecular weight hydrocarbons and inorganics, such as methane, acetylene, hydrogen, and carbon monoxide. Contaminants are absorbed on the charcoal as the process air passes through until the bed is saturated, at which time contaminants begin to breakthrough.

The catalytic oxidizer provides high temperature catalytic oxidation of low molecular weight compounds such as methane, hydrogen, and carbon monoxide, which are not absorbed in the charcoal bed. The catalyst bed contains 1.1 lbs catalyst (palladium on 1/8 inch alumina pellets) in 30 cubic inches of volume. A flow rate of 2.7 SCFM through the catalytic oxidizer produces a residence time of 0.4 seconds in the catalyst bed. The nominal operating temperature for the catalytic oxidizer is 750 °F, with a maximum operating temeperature of 1000 °F. Operation of the catalytic oxidizer at temperatures higher than the normal set point may help recover catalyst conversion efficiency in the event of poisoning. Catalyst poisoning is defined as a degradation of contaminant conversion efficiency. Testing has shown that only hydrogen sulfide causes an irreversible degradation in catalyst conversion efficiency. When the charcoal bed is replaced (at 90 day intervals) the catalyst recovers (high molecular weight poisons such as dichloromethane are removed by a fresh charcoal bed) resulting in a very low inlet concentration to the catalytic oxidizer until charcoal bed breakthrough occurs. The regenerable heat exchanger portion of the catalytic oxidizer is a plate/fin counter flow heat exchanger with a calculated efficiency of 90%.

The sorbent bed contains lithium hydroxide which is quickly converted to lithium carbonate in the presence of carbon dioxide in the process air stream. Its function is to remove the undesirable products of catalytic oxidation, such as Hcl, C_{12}, N_{O2}, and S_{O2}. These acid gases are produced during oxidation of chlorine, fluorine, nitrogen, or sulfur containing compounds which are poorly absorbed in the charcoal bed. Three pounds of lithium hydroxide (or lithium carbonate, which also effectively removes acid gases) is required for acid gas control. This is a conservative amount due to the extreme corrosiveness and toxicity of acid gases as well as the relative uncertainty of the oxidation by–products.

4.7.1.1.1.1 ETHYLENE

Payload developers and principal investigators planning plant growth investigations on ISS will need to consider in their experiment design the expected ethylene concentrations. Past experience on Mir should not be used as a basis for anticipating ethylene concentrations on ISS. The Russian trace contaminant control system does not include high temperature catalytic oxidation and, therefore, does not provide a significant removal route for ethylene. This is supported by extensive charcoal loading evaluations and the 0.6 mg/m^3 to 1.2 mg/m^3 ethylene concentrations measured onboard Mir. These concentrations indicate that ethylene is removed, at best, at an average of 0.5% by the Russian TCCS (that is, if atmospheric leakage is not included as a removal route). Although the activated charcoal can have an initial capacity, it is exhausted within the first minutes of operation. This situation is similar for methane and some other compounds that are very poorly controlled by activated charcoal alone. In the end, the U.S. TCCS catalytic oxidizer will serve as the primary removal route.

Based upon projected equipment off–gassing (2.27 10–7 mg/kg–h) and metabolic generation (0.5 mg/person–day) with an ISS internal hardware mass basis of 165,000 kg (both U.S. and Russian hardware) and a crew of 6, the total ethylene generation is projected at 0.162 mg/h. The projected rates are from NASA TM–108497, Trace Chemical Contaminant Generation Rates for Spacecraft Contamination Control System Design, dated August 1995. If only the TCCS catalytic oxidizer provides removal, then the projected concentration for ISS is 0.0354 mg/m^3 (approx. 0.031 ppm or 31 ppb). More will be known about the off–gassing load as ISS elements

are launched; however, the human metabolic load is much more significant and cannot readily be reduced unless the crew size is adjusted.

Projects that require ethylene levels lower than the predicted levels should plan to reduce the ethylene concentrations as required within the specimen habitats and, if required, within the glovebox environment.

4.7.1.1.2 MAJOR CONSTITUENT ANALYZER (MCA)

The MCA is an instrument that continuously monitors the partial pressures of oxygen, carbon dioxide, hydrogen, methane, nitrogen, and water vapor in the space station atmosphere, Table 4.7.1.1.2–I, MCA Performance Requirements. Connection to the Sample Delivery System (SDS) allows the MCA to draw atmosphere samples from the US and non–Russian international elements. Partial pressure results are reported to the Command and Data Handling (C&DH) system via a dual redundant MIL–STD–1553B bus. Oxygen data is used by Atmosphere Control and Supply (ACS) for oxygen control; carbon dioxide levels are compared against exposure limits and serve as an evaluation of station CO_2 removal performance; and methane and hydrogen are monitored to ensure that the TCCS maintains their concentrations below lower explosion limits. Nitrogen and water vapor data are also available. This information is available to the payload as ancillary data.

TABLE 4.7.1.1.2–I MCA PERFORMANCE REQUIREMENTS

Gas Monitored	Accuracy, % of Full Scale	Range. mm Hg
Nitrogen	± 2%	0–800
Oxygen	± 2%	0–300
Hydrogen	± 5%	0–50
Methane	± 5%	0–25
Water vapor	N/A[1]	0–25
Carbon Dioxide	± 3%	0–15

Note: 1. Polarity effects when monitoring water vapor using long, unheated sample lines make the accuracy undetermined at this time

The MCA can operate in either autosequence or rapid sampling mode upon command. The autosequence mode samples sequentially from a defined list of locations accounting for purge and background stabilization times at each new location, whereas rapid sampling reports constituent partial pressure data from a prescribed location every 2 seconds after the initial purge and stabilization. After an atmosphere sample is delivered to the MCA inlet via the SDS (approximately 2 to 5 minutes of purging depending on sample location), the MCA requires an additional two minutes for carbon dioxide background levels to stabilize before the sample analysis meets all of its accuracy requirements. Rapid sampling may be commanded during depress/repress operations, airlock campout monitoring, or as considered necessary by Tier I

software. Because the MCA must support depress/repress and airlock campout, it is designed to operate in and monitor locations at pressures ranging from 10 to 15.2 psia.

Measurement of the atmospheric constituents is performed by a Mass Spectrometer (MS) in the MCA. A gas sample is drawn into the MS by an inlet leak because of a pressure differential between the MS and the sample line. This extremely small gas sample is directed into an ion source, with redundant filaments for increased ORU life, where the gas molecules are ionized by the bombarding electron beam to create positively charge ions. The ions are accelerated and focused out the ion source and directed into a shaped magnetic field which disperses them according to their molecular weight. The dispersed ion beams are focused through resolving slits into faraday current collectors. The collected current is directly proportional to the number of molecules admitted in the gas sample, giving an electrical signal proportional to the mole fraction of each monitored gas species. An internal ion pump is used to remove admitted molecules in order to maintain the working environment of the spectrometer.

Before the ion pump can be started, an initial vacuum of 0.02 torr is required within the MS. A temporary connection to the payload VES provides the MS with a vacuum source for this initial vacuum operation. An ion pump, which has no moving parts or fluids, operates by surface absorption and chemical reaction (gettering) of gas with the active metal surfaces inside the ion pump. Fresh surface layers of titanium and tantalum are created within the pump by a sputtering process.

Current MCA firmware controller and INTSYS MDM sample timing is based on a sample cycle lasting one minute. The first 51 seconds of the cycle are for purging the SDS lines to deliver a representative sample to the MCA inlet. If more than 51 seconds is required for purging, additional time can be added in one minute increments so that the timing cycles don't become unsychronized between the MCA and INTSYS MDM. Thus, purge times can be 51 + 60X seconds (where X = 0, 1, 2, etc.). The remaining 9 seconds of a one minute cycle are for sample analysis, valve positioning, and command and data handling. MCA protoflight testing determined that approximately 80 to 90 seconds were required for CO_2 background transient error contributions to stabilize. Thus, an additional two minutes are required (2 sample cycles) to produce a sample analysis which meets accuracy requirements for CO_2 after a representative sample has been delivered to the MCA inlet. Therefore, total sample time for a given autosequence location will be X + 3 minutes, where X is defined above. For the rapid sampling mode, the same amount of time (X + 3 minutes) is required before accurate initial analysis results are available.

4.7.1.2 POTABLE WATER

The ISS provides potable water for the crew's consumption and hygiene and for use by experiments. The water comes from transportation of water from the ground by either the Progress resupply module provided by the RSA or by transferring fuel cell water from the NASA space shuttle when it is docked. A small amount is produced on orbit by the crew metabolic processes.

Water recycling equipment is provided by both the Russian and U.S. life support systems. The Russian system is used from the time the first crew arrives until Node 3 is added to the on orbit assembly. Node 3 will contain the U.S. water recycling equipment. After this time, both systems are used to support the crew of six or seven people.

Prior to the arrival of Node 3 and the U.S. water recycling equipment, payloads will make use of stored fuel cell water transferred from the orbiter or water brought specifically to orbit by a payload for its own use. The amount of water available for payload use will vary depending upon many factors involved in operations of the station and the orbiter. For example, time between flights, cargo weight and configuration in the orbiter, and the amount of cooling the orbiter performs using its flash evaporator system rather than its radiators.

Figure 4.7.1.2–1, Water Cycle Of US Life Support System shows the water cycle of the U.S. life support system. Fuel cell water is transferred via internal plumbing from the orbiter to a storage tank in the floor of the USL. Water from this tank is conducted via internal plumbing to the potable water storage in Node 3 as needed by the mass balance. Processed (recycled) water is also stored in the potable water storage tank.

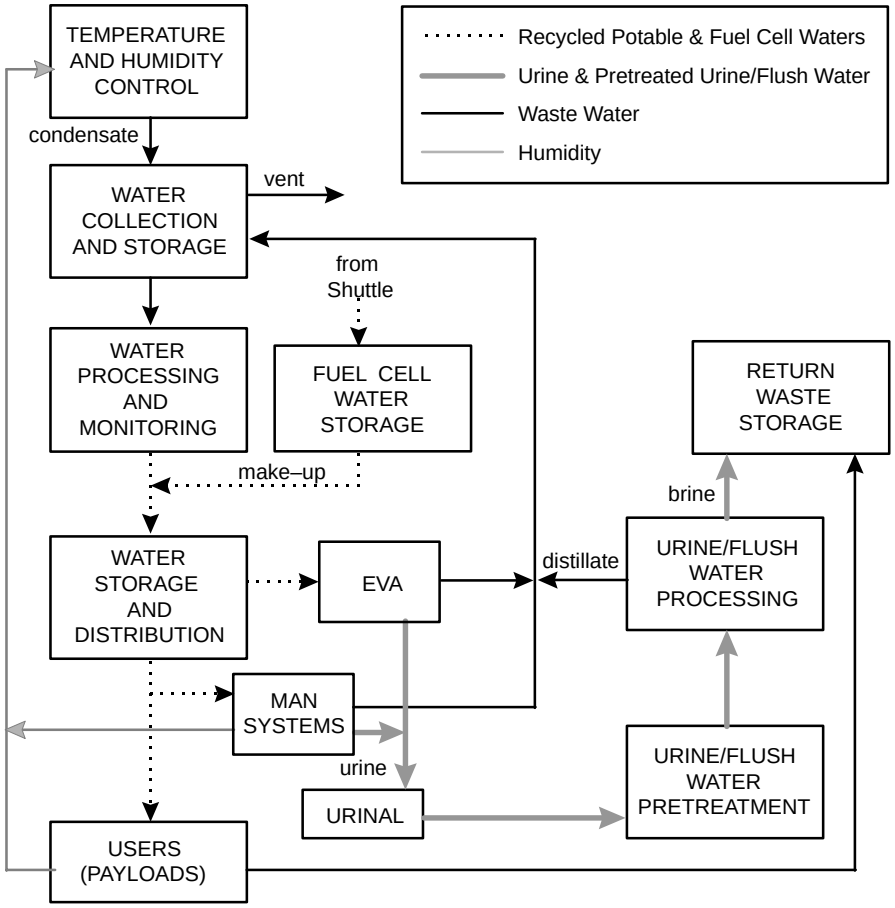

FIGURE 4.7.1.2–1 WATER CYCLE OF US LIFE SUPPORT SYSTEM

The water has many uses. It is used for consumption by the crew or for crew hygiene purposes. It is used during EVAs for drinking and by the EMA (Extravehicular Mobility Unit) space suits for cooling by evaporation into space. The oxygen generator electrolyzes water to provide oxygen for crew and animal metabolism. And, of course, payloads may use water for experiments and for supporting live specimens.

4.7.1.2.1 WASTE WATER

After an experiment uses water, it can be disposed of in two manners; evaporation or storage. Life sciences experiments are allowed to exchange air between specimen habitats and the cabin. Humidity from the habitats will enter the cabin atmosphere and be collected by the condensing heat exchanger in the Common Cabin Air Assembly (CCAA), or air conditioner. This water is condensed out of the air and stored in a waste water tank. This humidity condensate is transported via internal plumbing to the water processor in Node 3. If waste water builds up faster than the water processor can recycle it or faster than the crew and payloads can use the potable water, then the excess waste water is vented to space. Currently the ISS water system in its final configuration must provide up to 7.35 lb of water per day for payloads that is returned as humidity condensate to the water balance of ISS.

Liquid waste water produced by a payload must be stored by the payload and disposed of later either by transporting it to ground in the Space Shuttle or by destruction in the Earth's atmosphere when a non–reusable cargo vehicle re–enters. Payloads cannot use the waste water system to recycle payload generated liquid waste. No interfaces are provided in the waste water system for this purpose. There are three reasons for this:

(1) Experiment water may contain nutrients that will encourage microbial growth. There is not a method available to physically clean lines that become clogged due to biofouling. Biofilms also increase the rate of corrosion in pipes. The waste water lines must last as long as the module, at least 15 years.

(2) Venting of waste water may occur. The vent nozzle is heated to 250 F to prevent ice accumulation on the nozzle. Soluble salts will not be removed by the particulate filter in the vent assembly as the water passes to the external vent. These salts would accumulate on the vent as the water transitions to a vapor. The vent would likely clog over time. The vent can only be replaced by EVA.

(3) The chemical composition of payload waste water is undefined. The water processor has been designed and tested to provide potable water assuming a specified list of contaminants in the waste water, shower water, hand wash water, and urine distillate.

Currently the ISS water system in its final configuration must provide up to 4.8 lb of water per day for payloads that is considered waste water and cannot be returned to the water balance of ISS.

4.7.1.2.2 WATER QUALITY

Payloads will use stored water prior to the Node 3 water processing hardware being available. This water will be transferred from the Shuttle in Contingency Water Collection (CWC) bags. Some bags may contain water transferred directly from the Shuttle to the CWC without any processing. This water will contain iodine as a biocide. Table 4.7.1.2.2–I contains a statistical summary of analyses of fuel cell water from Tank A on Shuttle flights occurring from 1991 to 1994.

Some of the CWCs transferred to the ISS from the Shuttle will be processed to remove iodine and add silver as the biocide. Silver is used in the Russian potable water systems. This water is referred to as Technical Water. Some CWCs with silver biocide may also have additional minerals added for taste purposes. This is referred to in the Russian water system as Potable Water. Table 4.7.1.2.2–II provides some analyses of Potable and Technical water in CWCs from one of the Shuttle flights to Mir.

Payloads will obtain their water from the Water Processor in Node 3 after the water recycling hardware is available. This water will contain iodine as a biocide. The specification for this water is provided in Table 4.7.1.2.2–III. This table contains the upper allowable limit for contaminants.

TABLE 4.7.1.2.2–I SUMMARY OF SHUTTLE POSTFLIGHT TANK A WATER ANALYTICAL DATA FOR ALL FLIGHTS, 1991 TO 1994

	Cadmium (mg/L)	Chromium (mg/L)	Conductivity (μmho/cm)	Copper (mg/L)	Total Gas (ml/50mL)	Iodine (mg/L)	Iron (mg/L)	Lead (mg/L)	Manganese (mg/L)	Mercury (mg/L)
Mean	nd	nd	2.0	nd	nd	2.5	nd	nd	nd	nd
Std Dev.	–	–	1.2	–	–	0.6	–	–	–	–
Minimum	nd	nd	1.1	nd	nd	1.0	nd	nd	nd	nd
Maximum:	nd	nd	6.0	nd	nd	3.6	nd	nd	nd	nd
Det. Limit:	0.01	0.02	0.05	0.02	0.1	0.1	0.03	0.03	0.02	0.0002

	Nickel (mg/L)	Odor (TON)	pH	Potassium (mg/L)	Selenium (mg/L)	Silver (mg/L)	Taste (TTN)	TOC (mg/L)	Total Solids (mg/L)	True Color (PCU)
Mean:	nd	0.5	7.2	nd	nd	nd	0.7	1.7	1.1	nd
Std Dev.	0.04	1.0	0.4	–	–	–	0.6	3.3	2.5	–
Minimum	nd	0	6.1	nd	nd	nd	0	nd	nd	nd
Maximum	0.17	4	7.9	nd	nd	nd	2	12.0	11.0	nd
Det. Limit	0.05	0	0.1	0.1 - 1.0	0.01	0.01	0	0.2 - 1.0	1.0	5

	Turbidity (NTU)	Zinc (mg/L)	Anaerobes (+ or –)	Total Bacteria (CFU/100mL)	Total Coliforms (CFU/100mL)	Yeast & Mold (CFU/100mL)
Mean	nd	nd	–	9	nd	nd
Std Dev.	–	–	–	45	–	–
Minimum	nd	nd	–	nd	nd	nd
Maximum	0.18	nd	–	228	nd	nd
Det. Limit	0.10	0.01	–	1	1	1

Notes:

1. Test for anaerobes is presence (+), absence (–) only.
2. nd = ”none detected”, meaning analyte concentration is smaller than the statistical detection limit.
3. TON = threshold odor number; TTN = taste threshold number; CFU = colony forming unit; PCU = platinum–cobalt unit; NTU = nephelometric turbidity unit.
4. The mean was computed assuming nd = 0; if the resulting mean was less than detection limit, then it is considered “nd”.
5. For potassium, the detection limit varied between 0.1 and 1.0 mg/L. For TOC, the detection limit varied between 0.2 and 1.0 mg/L (instrument dependent).

TABLE 4.7.1.2.2–II ANALYSES OF WATER SAMPLES COLLECTED FROM STS–81 CONTINGENCY WATER COLLECTION (CWC) BAGS TRANSFERRED TO MIR

Samples	Free Silver mg/L	Total Silver mg/L	Total Iodine mg/L	Calcium mg/L	Magnesium mg/L	Sodium mg/L	Potassium mg/L	Fluoride mg/L	Ethanol mg/L	TOC mg/L	Turbidity NTU	Conduct. µS/cm	pH
CWC #1, P	0.24	0.26	< 0.05	27.7	4.73	0.57	1.28	0.51	15.3	29.3	0.04	176	5.9
CWC #3, P	0.28	0.28	< 0.05	27.6	4.69	0.56	0.51	0.49	60.3	40.3	0.05	177	5.9
CWC #9, P, 2	0.31	0.29	< 0.05	28.0	4.78	1.12	0.46	0.52	3.7	24.0	0.07	179	5.6
CWC #9, P, 1	0.29	0.28	< 0.05	28.4	4.84	0.57	0.09	0.51	3.4	25.8	0.02	183	5.6
CWC #15, P	0.20	0.25	< 0.05	24.5	4.17	0.75	0.24	0.48	1.6	19.0	0.05	158	5.7
CWC #6, T	0.31	0.31	< 0.05	0.46	0.09	0.48	< 0.01	0.49	7.4	5.3	0.13	6.5	5.2
CWC #12, T	0.29	0.38	< 0.05	0.13	0.03	0.57	0.01	0.53	2.1	2.8	0.10	5.1	5.2

Notes:

1. P. Potable Water
2. T. Technical Water
3. The crew collected 2 samples from CWC #9.
4. Free silver obtained by filtering an aliquot prior to acidifying for ICP analysis.
5. Total I by LCV measures all iodine species (iodide+iodine+HOI+triiodide).
6. TOC analyzed by Sievers laboratory instrument.
7. Ethanol is present due to preflight servicing of orbiter tanks using iodinated water prepared by diluting ethanol tincture of iodine

TABLE 4.7.1.2.2–III WATER QUALITY REQUIREMENTS
(Page 1 of 2)

Parameters	Specifications (4) Potable	Specifications (4) Hygiene
Physical		
Total Solids	100 mg/L	500 mg/L
Color True	15 PCU	15 PCU
Taste	3 TTN	NA
Odor	3 TON	3 TON
Particulates	40 microns (maximum size)	40 microns (maximum size)
pH	6.0 to 8.5	5.0 to 8.5
Turbidity	1 NTU	1 NTU
Dissolved Gas	(1) (free at 37 °C)	NA
Free Gas	(1) (STP)	(1) (STP)
Inorganics Constituents		
Ammonia	0.5 mg/L	0.5 mg/L
Arsenic	0.01 mg/L	0.01 mg/L
Barium	1.0 mg/L	1.0 mg/L
Cadmium	0.005 mg/L	0.005 mg/L
Calcium	30 mg/L	30 mg/L
Chlorine (total–includes chloride)	200 mg/L	200 mg/L
Chromium	0.05 mg/L	0.05 mg/L
Copper	1.0 mg/L	1.0 mg/L
Iodine (total–includes organic iodine)	15 mg/L	15 mg/L
Iron	0.3 mg/L	0.3 mg/L
Lead	0.05 mg/L	0.05 mg/L
Magnesium	50 mg/L	50 mg/L
Manganese	0.05 mg/L	0.05 mg/L
Mercury	0.002 mg/L	0.002 mg/L
Nickel	0.05 mg/L	0.05 mg/L
Nitrate (NO_3)	10 mg/L	10 mg/L
Potassium	340 mg/L	340 mg/L
Selenium	0.01 mg/L	0.01 mg/L
Silver	0.05 mg/L	0.05 mg/L
Sulfate	250 mg/L	250 mg/L
Sulfide	0.05 mg/L	0.05 mg/L

TABLE 4.7.1.2.2–III WATER QUALITY REQUIREMENTS
(Page 2 of 2)

Parameters	Specifications (4) Potable	Specifications (4) Hygiene
Inorganics Constituents		
Zinc	5 mg/L	5 mg/L
Bactericide		
Residual Iodine (minimum)	1 mg/L	1 mg/L
Residual Iodine (maximum)	4 mg/L	6 mg/L
Aesthetics		
CATIONS	30 mg/L	NA
ANIONS	30 mg/L	NA
CO2	15 mg/L	NA
Microbial		
Bacteria:		
Total count		
Bacteria/Fungi	100 CFU/100 mg/L	100 CFU/100 mg/L
Total Coliform	nondetectable	nondetectable
Virus	nondetectable	nondetectable
Organic Parameters (2)		
Total acids	500 mg/L	500 mg/L
Cyanide	200 mg/L	200 mg/L
Halogenated Hydrocarbons	10 mg/L	10 mg/L
Total Phenols	1 mg/L	1 mg/L
Total Alcohols	500 mg/L	500 mg/L
Total Organic Carbon (TOC)	500 mg/L	10,000 mg/L
Uncharacterized TOC (UTOC) (3)	100 mg/L	1,000 mg/L

NOTES:

(1) No detectable gas using a volumetric gas vs. fluid measurement system – excludes carbon dioxide used for aesthetic purposes.

(2) Each parameter/constituent Maximum Contamination Level must be considered individually and independently of others.

(3) UTOC equals TOC minus the sum of analyzed organic constituents expressed in equivalent TOC.

(4) Maximum Contamination Level.

4.7.2 TRASH MANAGEMENT

[TBD #14]

4.7.3 RADIATION

4.7.3.1 CHARGED PARTICLE RADIATION

Penetrating charged particles are produced from these sources: magnetospheric particles are accelerated from the plasma by processes inside the magnetosphere and occur only within terrestrial space. Cosmic rays exist in interplanetary space and enter terrestrial space from outside the region. The Sun emits energetic charged particles that are most intense during solar flares. The orbit of the ISS passes through the South Atlantic Anomaly (SAA), resulting in extreme ionizing particle events for 50 percent of the orbital passages for a period of 5 to 10 minutes each. The SAA is a region of high energetic particle flux density contained in the Van Allen radiation belts surrounding the Earth. Neutrons and x–rays are also present but contribute much less to the total ionizing radiation environment.

Charged particles that penetrate the ISS present a significant challenge to design and operation of most payloads. Many of the particles have sufficient energy to penetrate several centimeters of metal and to produce significant levels of ionization (radiation dose level) inside the ISS. A high level of radiation will significantly affect materials, chemical processes, and living organisms. It will also affect electronics by causing soft upsets (referred to as Single Event Upsets (SEU)), degrading performance, and producing permanent damage. In addition, ionizing radiation will affect the propagation of light through optical materials by altering their optical properties.

Although cosmic rays contribute less to the makeup of the total dose of radiation than trapped protons, they produce significant effects. They are responsible for SEUs, latch-up in microcircuits, and, along with trapped radiation-belt protons, the nuclei induce radioactivity in most materials. Cosmic rays also induce noise by production of ionization in devices such as charge-coupled devices and by production of Cerenkov and fluorescence radiation in photomultiplier tubes. For specific design issues, the actual anticipated radiation environment must be calculated. The document SSP 30425, Space Station Program Natural Environment Definition for Design, provides significantly more detail and information concerning available tools for calculating the expected natural environment.

The calculation of total flux through a given area within the pressurized volume of the ISS is quite complex. Generally, at high altitudes, trapped protons contribute nearly the entire amount of total dose. Below about 300-km altitude, cosmic rays make up the largest contribution. For very thin shields of less than 0.3 g/cm^2, trapped electrons are more important than trapped protons. At high inclination orbits, solar event protons make a significant contribution.

The design environment for the ISS is provided in SSP 30512, Space Station Radiation Design Environment. This document provides information for calculating ionizing radiation total dose

and for evaluating the Single Event Effects (SEE) environment. The design altitude and orbital inclination for the ISS is 500 km and 51.6°, respectively.

4.7.3.2 NOMINAL DESIGN ENVIRONMENTS

The total dose design environment for electronic devices and surface coatings is a summation of doses resulting from trapped protons and electrons and includes electron-induced bremstrahlung. Representative total doses for a 1-year lifetime on orbit are provided in Table 4.7.3.2–I. The dose is expressed in rads (Si). Radiation-absorbed dose (rad) of one rad is equivalent to an absorbed energy of 100 ergs/g. The numbers quoted are for silicon material at the center of an aluminum sphere of specified radius (shielding thickness).

TABLE 4.7.3.2–I NOMINAL TOTAL DOSE RATES FOR PRESSURIZED VOLUMES (RAD(SI)/YEAR)

SHIELDING (mils)	SHIELDING (mm)	SHIELDING g/cm^2	ELECTRONS rads (Si)	PROTONS rads (Si)	TOTAL DOSE rads (Si)
200	5.08	1.412	73.27	54.97	128.2
400	10.16	2.824	1.877	44.39	46.26
600	15.24	4.237	1.197	38.2	39.4
1000	25.4	7.061	0.836	29.95	30.79
2000	50.8	14.12	0.4779	18.92	19.4
Note: Values are with 1000 mil aluminum shielding.					

Tests and analyses for total dose effects on electronic devices are discussed in SSP 30513, Space Station Ionizing Radiation Effects Test and Analysis Techniques. For total doses less than 250 rads (Si) over the equipment on-orbit design lifetime, no total dose testing is required, see SSP 30513, paragraph 3.3.3.2. Non-MOS components may be eliminated from total dose testing if the orbital life dose is determined to be less than 2000 rad (Si), see SSP 30513, paragraph 3.3.3.3. In all cases, analyses will be conducted to assure that equipment exempt from testing meets performance requirements.

SEEs occur as the result of single ionizing particle interactions with electronic components of equipment. SEE may consist of SEU, Single Event Burnout (SEB), Single Event Gate Rupture (SEGR), latchup, or transients. The design environments include the SAA, the environment resulting from solar flares, the nominal orbital trapped radiation environment, and cosmic rays. Table 4.7.3.2–II shows representative differential flux spectra at various energy levels for nominal orbital, during passage through the SAA, and for solar flare maximum conditions. Note that these values are with 1000 mil aluminum shielding around the equipment position.

TABLE 4.7.3.2–II PROTON FLUX WITH 1000 MIL ALUMINUM SHIELDING

ENERGY (MeV)	ORBITAL DIFFERENTIAL FLUX SPECTRUM protons/cm^{2-}day-MeV	SAA PASS PEAK DIFFERENTIAL FLUX SPECTRUM protons/cm^{2-}day-MeV	MAXIMUM SOLAR FLARE DIFFERENTIAL FLUX SPECTRUM protons/cm^{2-}day-MeV
10	2.67×10^3	2.1×10^5	1.01×10^7
61.47	6.94×10^3	5.46×10^5	1.66×10^7
112.6	5.43×10^3	4.35×10^5	8.12×10^6
308.8	8.15×10^2	7.08×10^4	5.78×10^5

Testing of semiconductor devices to assure survival in this orbital environment is broken down for three classes of theses devices. Table 4.7.3.2–III shows the test conditions for representative tests which might be required for these devices, see SSP 30513, paragraph 3.4. The basic test conditions are specified in terms of a Linear Energy Transfer (LET) for silicon. LET is the linear density of all forms of energy transferred to an absorbing medium or material by a charged particle. For the first two classes of devices, the device is tested up to the fluence specified or until an SEGR or SEB occurs.

For devices other than power NPN bipolar transistors and N and P channel MOSFETs, the purpose of testing is to determine a rate for SEE caused by heavy ions. If no SEEs are recorded during the test conditions specified in Table 4.7.3.2–III, Representative SEE Device Testing Requirements, then further testing is not required.

The orbital environment in terms of heavy ion integral flux greater than a specified LET for two shielding thicknesses of aluminum is shown in Table 4.7.3.2–IV, Heavy Ion Integral Flux Expressed in Particles/cm^2–Day>LET. The flux for peak values and for orbit-average for a maximum solar flare are shown. Further details for the design environment for ionizing radiation are supplied in SSP 30512.

TABLE 4.7.3.2–III REPRESENTATIVE SEE DEVICE TESTING REQUIREMENTS

TYPE OF DEVICE	TEST REQUIRED	TEST CONDITIONS	
		LET MeV-cm^2/mg	FLUENCE Particles/cm^2
Power NPN Bipolar Transistors	Single Event Burnout	=> 26 Note 1	1 x 10^5
N and P Channel MOSFETs	Single Event Burnout Single Event Gate Rupture	=> 26 Note 1	1 x 10^5
Other Semiconductor Devices	Any SEE	=> 36 Note 2	1 x 10^6

NOTES:

1. Ions will have a range in the semiconductor material of at least 35 micrometers.

2a. Heavy ions (such as Br and Kr) will have a range in the semiconductor material of at least 30 micrometers.

2b. Low atomic weight ions will have a range in the semiconductor material of at least 80 micrometers.

TABLE 4.7.3.2–IV HEAVY ION INTEGRAL FLUX EXPRESSED IN PARTICLES/cm^2-DAY>LET

LET	Maximum Solar Flare Peak Heavy Ion integral Flux Particles/cm^2-day>LET		Maximum Solar Flare Orbit-Averaged Heavy Ion integral Flux Particles/cm^2-day>LET	
	Shield Thickness (mils)		Shield Thickness (mils)	
MeV-cm^2/mg	50	1000	50	1000
0.00161	1.82 x 10^{10}	2.04 x 10^9	5.26 x 10^8	1.08 x 10^8
0.105	4.54 x 10^7	4.52 x 10^6	6.86 x 10^6	1.89 x 10^5
1.29	6.58 x 10^5	437	4.27 x 10^4	56.8
20.8	1310	0.0821	183	0.0281
27.5	245	0.0147	34.7	5.09 x 10^{-3}
36.3	0.211	4.84 x 10^{-6}	14.8	3.76 x 10^{-6}

4.7.4 ILLUMINATION

The general illumination of the Space Station in the aisle will be a minimum of 108 lux (10–foot candles) of white light. This illumination will be sufficient for ordinary payload operations performed in the aisle (e.g., examining dials or panels, reading procedures, transcription, tabulation, etc.). Additional payload requirements can be found SSP 57000, paragraph 3.12.3.4.

4.8 VACUUM SYSTEMS

4.8.1 USL VACUUM SYSTEMS

4.8.1.1 SYSTEM DESCRIPTION

4.8.1.1.1 VACUUM EXHAUST SYSTEM

The Vacuum Exhaust System (VES) in the USL provides connections to 13 ISPR locations to vent gases from a payload. The racks interface to the VES via a connector at the UIP. A one inch flex line behind the UIP at each ISPR location connects the UIP connector to a Rack Isolation Valve (RIV). Each RIV has the capability to be manually operated with a 3/8 inch hex wrench in the case of loss of power, however, the rack in that location must be rotated out of position to access the valve. The one inch line from the UIP and RIV connects to a 2.5 inch header which runs the length of the rack stand–offs to the aft endcone, making connections to each other ISPR location in that stand–off. The 2.5 inch headers are collected in a 2.5 inch line in the aft endcone which leads to a non–propulsive vent on the port side. The 2.5 inch line in the aft endcone contains a motor operated valve near the module wall pass–through that can be manually operated with a 3/8 inch hex wrench. To access the VES 2.5 inch valve for manual operation, the LAB1D6 rack must be rotated out of position and the endcone accessed.

In the piping in the aft endcone, there are three pressure transducers, a Positive Pressure Transducer (PPT), which can measure pressures in the range of 0 to 40 psia, a Pirani Gauge Transducer (PGT), which can measure pressures in the range of 20 to $1x10^{-7}$ torr, and a Cold Cathode Transducer (CCT), which can measure pressures in the range of $1x10^{-3}$ to $1x10^{-7}$ torr. All three pressure sensors are powered by the Load Control Assembly (LCA) and data from the pressure sensors are sent directly to the tier III MDM. Both the LCA and the tier III MDM are in the aft endcone of the USL.

The tier III MDM in the aft endcone contains all of the software for controlling the VES Valves. The tier III MDM signals the LCA to apply power to the valves and to operate the valves. All valves in the VES are controlled by the LCA.

4.8.1.1.2 VACUUM RESOURCE SYSTEM

The Vacuum Resource System (VRS) in the USL provides connections to nine ISPR locations to maintain a vacuum in an experiment chamber. The racks interface to the VRS via a connector at the UIP. A one inch line behind the UIP at each ISPR location connects the UIP connector to a 2.5 inch header which runs the length of the rack stand–offs to the aft endcone, connecting to the other ISPR locations in that stand–off. The 2.5 inch headers are collected in a 2.5 inch line in the aft endcone which lead to the vent on the starboard nadir side. The 2.5 inch line in the aft endcone contains a motor operated valve near the module wall pass–through that can be manually operated with a 3/8 inch hex wrench. To access the VRS 2.5 inch valve, the LAP6 rack must be rotated out of position and the endcone accessed

In the piping in the aft endcone, there are three pressure transducers, a PPT, which can measure pressures in the range of 0–40 psia, a PGT, which can measure pressures in the range of 20 to $1x10^{-7}$ torr, and a CCT, which can measure pressures in the range of $1x10^{-3}$ to $1x10^{-7}$ torr. All three pressure sensors are powered by the Load Control Assembly (LCA) and data from the pressure sensors are sent directly to the tier III MDM in the aft endcone of the USL.

The tier III MDM contains all of the software that controls the VRS Vent Valve. The tier III MDM signals the LCA to apply power and to operate the valve.

4.8.1.2 SYSTEM CAPABILITIES

4.8.1.2.1 EXHAUST CAPABILITIES

The ULS VES is designed to reach a pressure of 0.13 Pa ($1.3x10^{-3}$ torr) within two hours.

4.8.1.2.2 THROUGHPUT

The USL VRS will maintain a pressure of 0.13 Pa ($1.3x10^{-3}$ torr) of a throughput of $1.3x10^{-3}$ torr*–liters/second.

4.8.2 JEM VACUUM SYSTEMS

4.8.2.1 SYSTEM DESCRIPTION

4.8.2.1.1 WASTE GAS SYSTEM

The Waste Gas (WG) System in the JEM provides connections to 10 ISPR locations for exhausting gases from payloads. The racks interface to the WG via a connector at the UIP. A one inch line behind the UIP at each ISPR location connects the UIP connector to a RIV. The one inch line from the UIP and RIV connects to a 3.5 inch header which runs the length of the stand–offs to both the port and starboard endcones, connecting to other ISPR locations in that stand–off. The 3.5 inch headers are collected in a 3.5 inch line in the port endcone which leads to a non–propulsive vent on the port endcone. In the starboard endcone, the 3.5 inch headers are collected by a 3/4 inch line which leads to a non–propulsive vent on the starboard endcone. The 3.5 inch line in the port endcone contains a pneumatically operated valve near the module wall pass–through and a manually operated valve between the pneumatic valve and the module wall. The 3/4 inch line in the starboard endcone contains a motor operated valve near the module wall pass through a manually operated valve between the motor operated valve and the module wall.

In the piping in the port endcone, there are three pressure transducers, and a temperature sensor.

4.8.2.1.2 VACUUM VENT SYSTEM

The Vacuum Vent (VV) System in the JEM provides connections to six ISPR locations to maintain a vacuum in an experiment chamber. The racks interface to the VV via a connector at the UIP. A one inch line behind the UIP at each ISPR location connects the UIP connector to a RIV. The one inch line from the UIP and RIV connects to a 2.5 inch header which runs the length of the stand–offs, connecting to other ISPR locations, to the port endcone. The 2.5 inch headers are collected in a 2.5 inch line in the port endcone which leads to the vent on the port endcone. The 2.5 inch line in the aft endcone contains a pneumatically operated valve near the module wall pass–through and a manual valve between the pneumatic valve and the module wall.

In the piping in the starboard endcone, there are 2 pressure transducers.

4.8.2.2 SYSTEM CAPABILITIES

4.8.2.2.1 EXHAUST CAPABILITIES

The JEM WG system is designed to evacuate a payload chamber of 100 Liters at an initial pressure of 101kPa to a pressure of 0.13 Pa in less than two hours. The maximum initial gas pressure allowed to the WG system is 276 kPa (40 psia).

4.8.2.2.2 THROUGHPUT

The JEM WG is designed to maintain a pressure less than 0.13 Pa (1.3×10^{-3} torr) of a throughput of 0.001 mbar*liter/sec.

4.8.3 APM VACUUM SYSTEMS

4.8.3.1 SYSTEM DESCRIPTION

4.8.3.1.1 WASTE GAS SYSTEM

The WG System in the APM provides connections to 10 ISPR locations for exhausting gases from payloads. The racks interface to the WG system via a connector at the UIP. A one inch line behind the UIP at each ISPR location connects the UIP connector to a RIV. The one inch line from the UIP and RIV connects to a two inch header which runs the length of the stand–offs to the port endcone. The two inch headers are collected by a two inch line in the port endcone which leads to a non–propulsive vent. The two inch line in the port endcone contains two motor operated valves near the module wall pass–through.

In the piping in the port endcone, there are two pressure transducers, and a temperature sensor.

All of the valves in the WG system are powered from the same power source.

4.8.3.1.2 VACUUM VENT SYSTEM

The VV System in the APM provides connections to eight ISPR locations to maintain a vacuum in an experiment chamber. The racks interface to the VV via a connector at the UIP. A one inch line behind the UIP at each ISPR location connects the UIP connector to a two inch header which runs the length of the stand–offs to the starboard endcone. The two inch headers are collected in a two inch line in the starboard endcone which leads to the vent. The two inch line in the starboard endcone contains two motor operated valves near the module wall pass–through.

In the piping in the port endcone, there are two pressure transducers and a temperature sensor.

All of the valves in the VV system are powered from the same power source.

4.8.3.2 SYSTEM CAPABILITIES

4.8.3.2.1 EXHAUST CAPABILITIES

The APM WG System (VES) will reach a pressure of 0.06 Pa 90.4 x 10^{-3} torr) within 2 hours and will meet the required interface pressure of 0.13 Pa (1 x 10^{-3} torr) within 28 minutes for a chamber volume of 100 liters.

4.8.3.2.2 THROUGHPUT

The Payload must reach a pressure of lower than 0.13 Pa (1 x 10^{-3} torr) before it will be connected to the Vacuum Vent System (VRS).

The APM Vacuum Vent System (VRS) is not able to maintain the pressure at 0.13 Pa (1 x 10^{-3} torr) with the specified gas load of 0.001 mbar*liter/sec. This gas load will lead to an interface pressure of 0.17 to 0.19 Pa (1.2 x 10^{-3}) to 1.4 x 10^{-3} torr). However, if the gas load is reduced the pressure will be reduced as well.

4.8.4 VACUUM SYSTEMS OPERATION

4.8.4.1 FUNCTIONAL OPERATION

The functional operation of the vacuum systems in the USL, JEM and APM are all similar. The payload chamber must be evacuated though the VES in the USL or the WG system if in the APM or JEM. The maximum initial pressure that may be vented to the VES or WG systems is 40 psia (2.758 bar). The VES and WG systems will exhaust one user chamber at a time (controlled by system lock–outs) to a pressure of 1x10^{-3} torr (1.3x10^{-10} mbar). Once at a pressure of 1x10^{-3} torr (1.3x10^{-10} mbar), the payload chamber may switch over to the VRS or

VV system (depending on which module the payload is in). The VRS and VV systems are capable of maintaining a pressure of $1x10^{-3}$ torr ($1.3x10^{-10}$ mbar) in the payload chamber when sustained vacuum is desired. The USL VRS is capable of maintaining up to six user payloads at one time. The VRS and VV systems are not designed to exhaust gases, only to maintain vacuum by removing offgassing and leakage that may occur in an experiment chamber. If the payload begins to vent gases while venting to the VRS or VV system, the payload must immediately close the connection to the VRS/VV system.

The VS designs in all the modules do not provide the capability to control which system the payload chamber is venting to. When a payload wishes to use the VRS /VV systems, the payload must be designed to provide the switch over between the VES/WG and the VRS/VV systems. The payload also must provide the capability to stop venting to the VRS/VV should a failure occur which would cause venting gases to enter that system.

4.8.4.2 VACUUM EXHAUST (WASTE GAS) SYSTEMS OPERATION

The VES and the WG Systems are designed to allow only one payload user access to the system at one time. Controlling access to the VES prevents multiple payloads from venting gases that may not be compatible. It also prevents a payload from venting, increasing the pressure in the system piping, when another payload may be at the lower system pressure at the end of it's vent cycle. The vent valve will normally be left in the open position, except for occasionally cycling of the valves for checkout and maintenance purposes.

4.8.4.3 VACUUM RESOURCE (VACUUM VENT) SYSTEMS OPERATION

The VRS allows multiple payloads to access vacuum at one time. The VRS/VV systems will carry leakage gases and offgassed gases away from the experiment chamber to maintain vacuum. If an experiment will use the VRS/VV and is sensitive to small amounts of foreign material, the payload should provide a means to isolate the experiment from the VRS/VV. The vent valve will normally be left in the open position, except for occasionally cycling of the valves for checkout and maintenance purposes.

4.8.5 SYSTEM WETTED MATERIALS COMPATIBILITY ANALYSIS

Gases that are vented to the ISS Vacuum Systems (VS) must not degrade the wetted materials within the system piping. Payload developers who wish to vent gases to the VS are required to submit a list of vent gas constituents to the ISS program. The program will analyze the vent gases and the materials in the VS to determine if the gases are compatible with the VS wetted materials. When submitting this list, it is important to identify which gases will be vented together, the concentration of the gas constituents, the initial temperature and the initial pressure.

This analysis will consider flammability, pitting and general corrosion of the system wetted materials. The analysis will consist of a literature search that will review technical documentation for documented compatibility of exhaust gasses with the wetted materials listed

in SSP 41002, paragraph 3.3.7.2. Materials and gases will be considered compatible if the documentation shows one of the following: existing use of the material in a system containing the gas in question, test data showing compatibility, or general materials information stating compatibility. For exhaust gases where no technical data showing compatibility is found, a modified test 15 may be conducted, as specified in NHB 8060.1, Flammability, Odor, Offgassing, and Compatibility Requirements and Test Procedures for Materials in Environments that Support Combustion. The test will review material weight loss, wetted material surface changes and wetted material trace contaminate inclusion in the test gases after exposure to the materials.

Once the gases are analyzed, the payload developer will be informed of which gases are acceptable and which gases are not. Once gases are analyzed, the gases that are compatible and gases that are not compatible will be documented in SSP 57000, Section 3.6. The payload developer is responsible for disposing of the gases that are not compatible with the VS wetted materials.

4.8.6 VACUUM EXHAUST (WASTE GAS) SYSTEM ACOUSTICS

Loud noises exceeding the acoustics requirements are possible during the operation of the VES unless the payload design has accounted for acoustics control. During development and testing of the USL vacuum system, the following lessons were learned.

Abrupt expansions or piping size changes create rapid gas expansion points, which created acoustic noise. Payload VES piping should be designed to allow smooth transitions between line sizes, optimally a Venturi design would allow the smoothest transition, however increasing the line sizes in steps (with intermediate size diameter piping) helps to reduce the noise generated.

Hoses or bellows with corrugated interiors will generate acoustic noise when the exhausting gases flow through them. The flow of gas past these corrugations generates vibrations and turbulence in the gas flow, both of which will generate acoustic noise. When flex lines are used, hoses which interior diameters that are corrugated should be avoided to reduce the noise generated by the payload system. This is especially important if a hose is used to connect the rack system to the UIP connector, because this area of the system is not behind a structure which can help to attenuate noise.

The use of “T” junctions creates acoustic noise due to the impingement of the gases onto the wall of the pipe junction. To avoid generating noise in the payload system, curves, bends or other smooth transitions should be used in place of “T’s”, 90 degree elbows or sharp turns.

Use of acoustic insulation will help minimize noise affects. The best acoustic wrapping design leaves a gap between the noise source and the acoustic insulation, allowing the physical vibrations of the noise source to dampen and not vibrate the acoustic insulation at the same time, leaving the insulation to generate the noise. This may be accomplished by first wrapping the noise source in felt, or similar low density material, then wrapping the acoustic insulation around the felt. Note that 100% coverage of the noise generating system is important for both the felt and acoustic insulate to attain the optimum affects, however some noise reduction may be

possible without 100% coverage, by only insulating the area of noise generation. Caution should be used if only partial insulation is used because some noise will travel down the piping, so, depending on the noise source and location, partial insulation may not provide the desired affects. The thickness of insulation and/or the number of wraps around the noise source will depend on the noise attenuation desired and the type of insulation used will depend on the noise characteristics (frequency).

4.9 CAUTION AND WARNING / FIRE PROTECTION

4.9.1 CAUTION AND WARNING

The ISS alerts the crew to abnormal/hazardous conditions via the Caution and Warning (C&W) system. There is not a dedicated system for payloads, payloads access the same system to alert the crew of payload abnormal/hazardous conditions on ISS via the Payload MDM. Further, more detailed, information about the C&W system can be found in D684–10299, Caution and Warning System Description Document.

The C&W system classifies events into 4 classifications.

4.9.1.1 EVENT CLASSIFICATIONS

4.9.1.1.1 EMERGENCY (CLASS I)

An emergency situation is defined as a rapid cabin depressurization, toxic atmosphere or fire. Crew response to an emergency event includes all crew responding to the source or the event immediately. Class I events result in a single aural tone and dedicated red lights on both the C&W panels and PCS displays.

4.9.1.1.2 WARNING (CLASS II)

A warning situation is defined as a:

A. Potential fire event detected by sensor other than an ISS–approved rack smoke detector.

B. A precursor event that could manifest to an emergency condition (toxic atmosphere, rapid cabin depressurization or fire) and

   (1) automatic safing has failed to safe the event or

   (2) the system is not automatically safed (i.e. requires manual intervention).

C. An event that results in the loss of a hazard control and

   (1) automatic safing has failed to safe the event or

(2) the system is not automatically safed (i.e. requires manual intervention).

A Warning requires only one of the crew to take action immediately. Warnings are used for events that require manual intervention and for notification when automatic safing fails. Class II events result in a single red light on the C&W panel and a single non–discriminate tone. Class II event alarms can be adjusted by the crew from full volume to barely audible.

4.9.1.1.3 CAUTION (CLASS III)

A caution situation is defined as:

A. A precursor event that could manifest to an emergency condition (toxic atmosphere, rapid cabin depressurization or fire) and automatic safing has safed the event (i.e. the system does not require manual intervention),

B. An event that results in the loss of a hazard control and automatic safing has safed the event (i.e. the system does not require manual intervention)

A Caution requires no immediate action by the crew. Automatic safing has controlled the event. Class III events are enunciate with an aural tone and a light on the C&W panel. Class III event alarms can be adjusted by the crew from full volume to barely audible.

4.9.1.1.4 ADVISORY

An advisory event can be set by the payload developer for the following purposes:

A. Advisories are set primarily for ground monitoring purposes (advantageous due to limited comm. coverage and data recording)

B. Data item that most likely will not exist permanently in Telemetry List but should be time tagged and logged for failure isolation, trending, sustaining engineering, etc.

4.9.1.2 PAYLOAD SYSTEM INTERFACE TO THE C&W SYSTEM

The C&W system software is in the Command and Control (C&C) MDM. To access the C&W system, payload data must identify a C&W word in the health and status communicated to the Payload MDM. That word must be coded by the payload to identify the condition of the payload as no–problem or one of the event classes defined above. The Payload MDM compares that value with stored data values in the Limit Check Table (LCT) to determine the event classification communicated from the payload.

The Payload MDM will then communicate the event and classification to the C&C MDM for enunciation on the C&W system. A functional schematic of the data transmission route is shown in Figure 4.9.1.2–1.

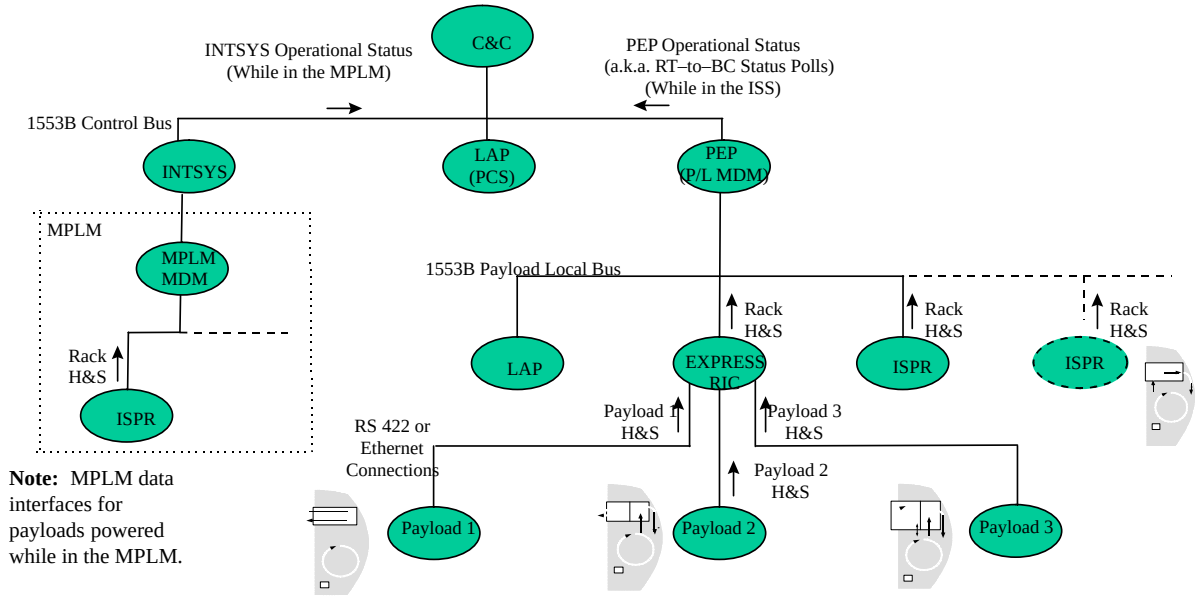

FIGURE 4.9.1.2–1 DATA TRANSMISSION ROUTES FUNCTIONAL SCHEMATIC

4.9.1.3 PAYLOAD MDM FUNCTIONAL OPERATION (FOR C&W EVENTS)

4.9.1.3.1 DATA EVALUATION

When the payload MDM receives the C&W word in the Health and Status from the payload, the value of the word, which is a 16 bit integer, is compared against values in the LCT. An example of the LCT fields is shown in Figure 4.9.1.3.1–1.

The LCT in the Payload MDM also has the capability to check the values of the parameter up to 60 times before logging the event. If the payload data is communicated at a rate of 1 Hz, to check the parameter 60 times would take 1 minute. This option can be utilized to prevent false alarms due to “bit–flops,” radiation originated signals, or other transient false alarms by checking the parameter more than one time. To utilize this option, the value representing the number of times the value should be checked must be preprogrammed into the LCT.

The payload MDM, by use of the LCT, has the capability to issue a command when a C&W event classification is logged. However, the commands will only be issued after the trip count has exceeded the table value. Should the payload wish to have power to the rack terminated or another command initiated at the time the event is communicated to the Payload MDM, the payload MDM LCT can be pre–programmed to issue the desired command. Similarly, if “stale” data is received from the payload (no data received when data is expected) the payload MDM LCT can be pre–programmed to issue a command (to terminate power or another command).

Once the Payload MDM LCT has determined the value of the C&W word, and therefore the event classification, the payload MDM passes the C&W notification to the C&C MDM. The C&C MDM contains the C&W system software and will take the appropriate actions dictated by the event classification.

The LCT Fields will be updated at the beginning of every payload increment.

	Enable Monitor	Data Address	Payload Index	Data Type	Exception Class	ECW Index	Trip Count	Annunciation Level	Command	Message	Integer	Long Integer	Float	Long Float	Boolean
1															
⋮															
250															

FIGURE 4.9.1.3.1–1 LIMIT CHECK TABLE FIELDS

4.9.1.3.2 PAYLOAD SAFETY DATA

The payload data used to determine a C&W event is considered safety data. Safety data is passed from the payload to the Payload MDM. The Payload MDM will send this data to the ground via the Ku band system and send the data to the C&C MDM. The C&C MDM will send the data to the ground via the S–band system.

4.9.2 FIRE PROTECTION

Fire protection design for payloads is be broken down into three areas, Fire Prevention, Detection and Suppression. Each must be reviewed, designed for and addressed separately.

4.9.2.1 FIRE PREVENTION

The second area of fire prevention is the reduction of ignition sources. Fire prevention includes designing a payload with the proper wire sizing and proper materials selection. Proper fire prevention design features reduce the risk by reducing the likelihood of a fire occurring.

4.9.2.2 FIRE DETECTION

Reducing the risk of occurrence of a fire by using proper fire prevention design features is important. However, the occurrence of a fire is itself a failure, therefore fire prevention alone is not sufficient to be considered a safe design, detection capabilities must also be provided.

4.9.2.2.1 SMOKE DETECTION

The ISS Provided rack smoke detector is the preferred detection device to be used in the design of the rack. There are two types of smoke detector used on the ISS, an area smoke detector and a duct smoke detector. An area smoke detector is used in open cabin areas and has a shield around the sensing device to prevent light from a light source from entering the smoke sensor, which could cause it to alarm. Duct smoke detectors do not have the shield. In constructing an area smoke detector, a duct smoke detector is built, then the shield is added, therefore both smoke detectors are functionally identical and have the same interfaces. Any interface documentation referring to one type of smoke detector is applicable to both the Area and duct smoke detectors.

When the smoke detector senses a fire, it must sense the fire for 2 consecutive cycles (at a 1 Hz rate) to confirm the event. Once it has confirmed the fire event by receiving the second signal, a signal is sent to the C&C MDM via the connections at the J43 connector on the UIP. The C&C MDM will respond by sounding a Fire Emergency alarm and by terminating all power being supplied to the rack.

When the smoke detector senses a fire, the C&C MDM will also send a signal through a dedicated connection on the J43 connector to activate a Light Emitting Diode (LED) on the Rack Maintenance Switch Assembly (RMSA) of the rack with the fire. Figure 4.9.2.2.2–1 shows the Rack Maintenance Switch Assembly (RMSA).

To integrate the smoke detector into the rack, the smoke detector must be mounted in the appropriate area to receive the specified air flow, and the interface connections must be wired to the J43 connection.

To function properly, the smoke detector must receive airflow from the rack. The location of the smoke detector should be chosen such that the smoke detector will receive the appropriate air flow with a sampling of air from all parts of the rack. The rack design should not allow forced air exchange with the cabin. If there is a fire in the rack and the smoke is leaked to the cabin, the cabin sensor will activate an alarm. When the sensor in the cabin detects a fire, the entire module is powered off and the exact location of the fire will not be known.

The smoke detector is capable of detecting it's own failures that would render it inoperable. To determine whether or not the smoke detector is receiving the proper airflow, the flow must be monitored and an indication must be given to the ISS via the J43 connection to show whether or not this flow is provided. If the proper air flow is not provided, the smoke detector is considered inoperable. If the smoke detector fails or is considered inoperable, the rack will be powered off and an assessment of the situation will be made.

Additional information on the smoke detector can be found in SSP 57000, Section 3.10.

4.9.2.2.2 RACK MAINTENANCE (RACK POWER) SWITCH

The ISPR Rack Maintenance Switch (RMS), or Rack Power Switch (RPS), provides an interface to the C&C MDM, through the tier III MDMs, to remove power supplied to the rack location. The RPS removes power supplied to all power feeds to the rack by commanding the C&C MDM to "open" the Remote Power Controller (RPC) on the ISS power feed to that rack location. The RPS should be mounted in an easily visible location on the front of the rack. The preferred location is the lower right corner of the rack. The interfaces from the RPS connect to the J43 connector at the UIP. More information about the PRS can be found in SSP 41002, paragraphs 3.3.1.6 and 3.3.1.7; SSP 57000 paragraphs 3.2.5.2, 3.3.10.1, and 3.3.10.3; and SSP 57001, paragraphs 3.3.5.3. Information about an available RPS assembly can be found in drawings 683–50370 and 683–50371.

The RPS is a manually–operated, two–position, guarded, lever–lock switch mounted such that the switch is closed when in the up position. The labels used to cover the switch assembly are shown in figures Figure 4.9.2.2.2–1. Note that the ON position of the switch is down in the USL and CAM, and up in the APM and JEM. This is due to software and hardware implementation differences between these modules.

The initial implementation of the maintenance function software in the USL Internal (INT) MDM (a Tier II MDM) was designed so that when the function is enabled, the C&C MDM will be commanded to remove power from the rack (both system and ISPR) when the switch is opened (down). When the function is disabled, the RPS will have no effect on the rack power.

In the USL, the RPS is tied to a Tier III MDM via the J43 connector. This MDM contains an I/O card that receives RPS inputs from many racks. The USL designers determined that if the I/O card failed when the rack maintenance function was enabled, the INT MDM would consider all the RPS's for all the racks connected to that I/O card had open switches and would remove power from all the racks. Since system racks also have RPS's, this could result in a cascade of failures leading to loss of critical USL functions.

The ISS program decided to revise the maintenance function software such that an open RPS would allow power to be applied to the rack and a closed power switch would result in the rack power being turned off. Thus, if the I/O card failed, powered would not be removed from racks that needed to remain powered.

NASDA would not agree to revise their maintenance function software in the JEM MDMs because they did not use RPS's on system racks, only on ISPRs. ESA had designed the APM power system with solid state relays and therefore could not implement the change.

Therefore, the USL and CAM have the switch in the down position for rack power ON and the APM and JEM have the up position for rack power ON. When an ISPR is moved to another module, the label on the switch is changed when appropriate.

In addition to the RPS, the RPCs can be commanded open or closed from the ground and from the ISS PCS. Therefore commanding power off at the RPS alone is not sufficient to power off the rack for maintenance, during maintenance the rack power umbilicals from the UIP will be disconnected. However, the RPS does provide the means to control the up–stream inhibit needed for the mate–demate operation as long as the maintenance function software is enabled.

GENERAL NOTES (UNLESS OTHERWISE SPECIFIED):

1. DECAL MASTER ARTWORK PER DECAL DESIGN AND PRODUCTION FACILITY, JOHNSON ENGINEERING, HOUSTON, TX.
2. DECALS TO BE MADE FORM 15 MIL LEXAN (P/N 8A13–112 MATEE FINISH) SUPPLIED BY GENERAL ELECTRIC CO. SPECIALTY PLASTICS DIVISION, PITTSFIELD, MA. USE 9900 SERIES INKS SUPPLIED BY COATES INC RUTHERFORD, NJ. APPLY 3M 966 PRESSURE SENSITIVE ADHESIVE, AVAILABLE FROM THE 3M COMPANY, MINNEAPOLIS, MN, TO REVERSE SIDE OF DECALS. ARTWORK TO BE APPLIED USING REVERSE SCREEN PRINT PROCESS.
3. DECAL WILL NOT HAVE PART NUMBER OR SERIAL NUMBER ON INDIVIDUAL DECAL. AFTER MANUFACTURING, DECAL SHALL BE BAGGED AND IDENTIFIED PER NASA/JSC PRC–9002A, PARA 3.3.10 (CONTAINER MARKING).
4. DIMENSIONAL TOLERANCE FOR DECAL MANUFACTURING TO BE + OR – 0.06 INCH.
5. DIMENSIONS IN INCHES UNLESS NOTED OTHERWISE.
6. CLEAN TO LEVEL GC PER NASA/JSC PRC–5001.
7. PARTS ARE NOT FRACTURE CRITICAL

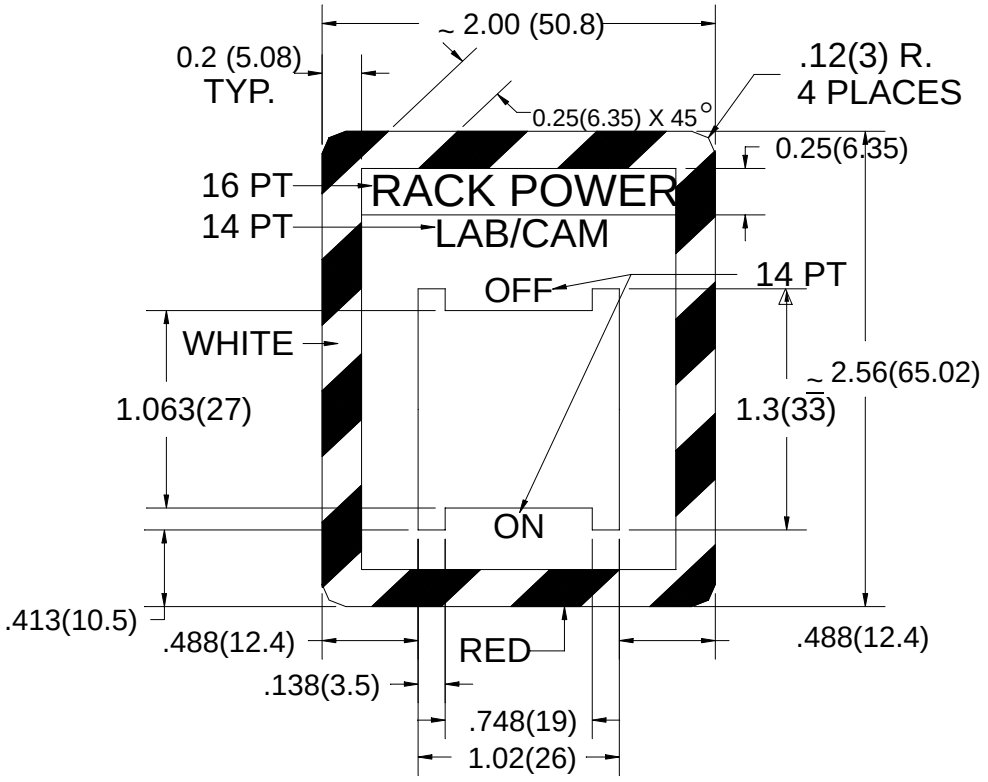

–002

FIGURE 4.9.2.2.2–1 RACK MAINTENANCE SWITCH ASSEMBLY (RMSA) (SHEET 1 OF 2)

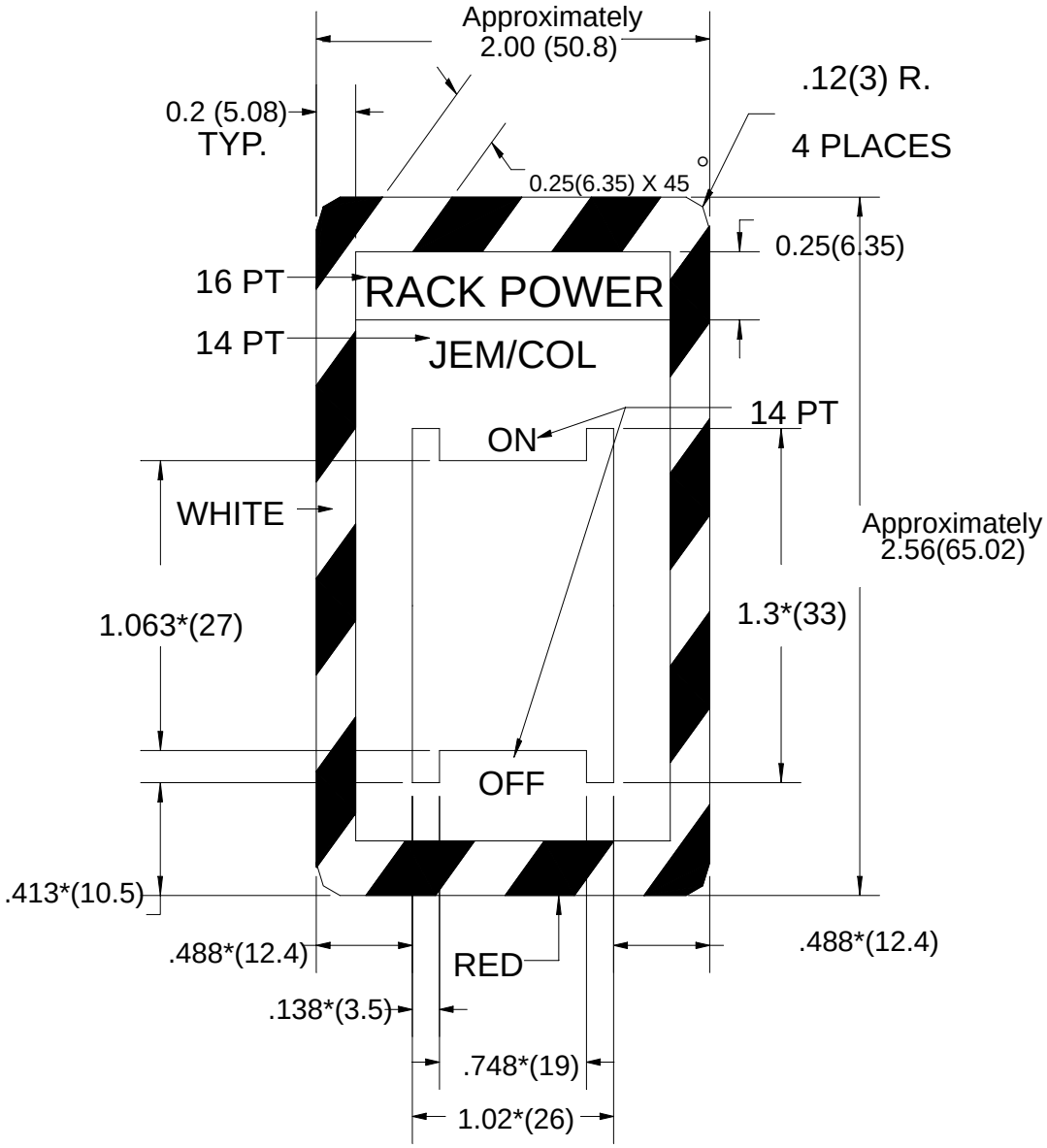

–003

FIGURE 4.9.2.2.2–1 RACK MAINTENANCE SWITCH ASSEMBLY (RMSA)
(SHEET 2 OF 2)

4.9.2.2.3 ALTERNATE FIRE DETECTION

Whenever possible, the rack should be designed to use the rack smoke detector. If there is any way possible to duct air within the rack or to prevent air circulation with the cabin, that design approach should be considered the best option for fire protection purposes. Payloads which are designed such that the rack smoke detector draws air from all parts of the rack do not need further monitoring. Figure 4.9.2.2.3–1 shows the preferred fire detection scheme.

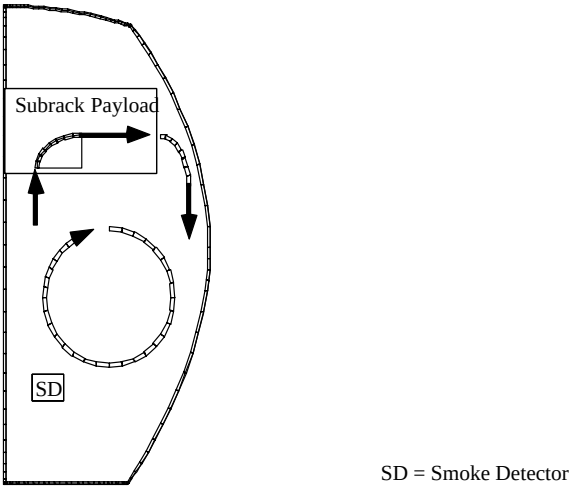

FIGURE 4.9.2.2.3–1 PREFERRED FIRE DETECTION SCHEME, SMOKE DETECTION

However, some design constraints will not allow air to be exchanged with the rack smoke detector. Some existing middeck lockers must exchange air with the cabin for avionics cooling due to the existing Shuttle middeck avionics cooling design and some payloads must exchange air with the cabin for metabolic reasons. These designs cannot exchange air with the rack smoke detector because the air is exchanged with the cabin, Figure 4.9.2.2.3–2 shows these configurations. Additionally, some payloads are designed to provide isolation, as shown in Figure 4.9.2.2.3–2.

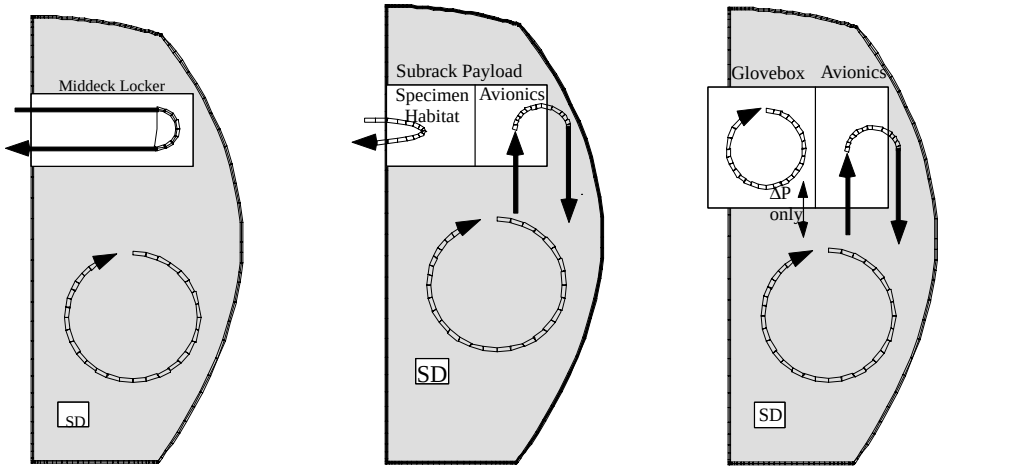

SD = Smoke Detector

FIGURE 4.9.2.2.3–2 VOLUMES WHICH CANNOT USE THE RACK SMOKE DETECTOR AND MUST PROVIDE AN ALTERNATE MEANS OF FIRE DETECTION

For volumes which cannot exchange air with the rack smoke detector, alternate detection sensors must be provided in the payload design. The number, type and location of these sensors should be determined by the payload developer considering the hazard that exists within the volume.

If the alternate detection system is used, the payload should use the C&W system described in section 4.9.1 to enunciate the event to the crew. Payloads cannot declare an emergency on the ISS C&W system except for the rack smoke detector. When fires are detected by the alternate sensors, the payload must format the C&W word to indicate a Warning (Class II) event.

Payloads using the alternate detection system must provide a means of terminating power to the volume being monitored. Power may be removed automatically or manually, however if manual power termination is selected, a means of automatic power termination must be provided. The automatic means must be provided to be activated during times that the crew will not be available, such as during assembly EVAs.

4.9.2.2.4 FIRE SUPPRESSION

Payload designs must accommodate the application of fire suppressant from the ISS Portable Fire Extinguisher (PFE). The ISS PFE closed volume nozzle is designed to enter PFE Access Ports to apply suppressant internal to a volume. PFE Access Ports are required for all separate internal volumes on ISS, including the stand–offs and end–cones. For payloads designed as one volume to use the rack smoke detector, only one PFE Access Port should be provided on the front side of the rack. The ideal location for the PFE Access port is in the center of the front face of the rack, however, the location should be chosen to meet the required oxygen dispersment level required in the required time.

When determining the location of the Access Port, a location which is readily visible to the crew is an important design consideration. Also, the ability of the crew to see the access port while inserting the closed cabin nozzle should be considered. The crew will be wearing a Personal Breathing Apparatus when trying to extinguish a fire event.

Payloads who have volumes that are monitored as separate volumes, must provide one PFE Access Port for each location.

To allow the PFE to access the PFE Access Port, a keep–out zone around the Access Port must be provided. This keep–out zone must allow the PFE vessel to get close enough to the rack face to allow the Closed Cabin nozzle to interface with the Access Port at all times. The design of the rack face should allow access to the access ports without relying on the volumes next to the rack, payloads adjacent may have protrusions which would interfere with the PFE vessel.

This keep out zone must be provided for all PFE Access Ports, including station access ports in the stand–offs and end–cones. Payloads which plan to have protrusions into the cabin must keep this in mind, as the payload must be compatible with all ISS locations. Payloads with protrusions must also be aware that the PFE Ports on racks in the same bay above and below also must not be blocked.

The ISS PFE uses carbon dioxide as the suppressant. More information about the PFE can be found in SSP 30262:010 and SSP 57000.

4.10 MATERIALS

4.10.1 MATERIALS SELECTION

There is not an approved materials list for ISS, however there are lists of materials that have been found to be acceptable for specific applications. Two of these lists are 1F01444, Approved Materials List – Space Station, and ESA PSS–01–701, Data For Selection Of Space Materials. Materials in these lists have passed the safety requirements for specified uses and may be used for the applications specified in these documents without further analysis. However, materials used by payload developers do not have to be contained within these documents. A list of material test data and a specified rating is published in MSFC–HDBK–527, Materials Selection List for Space Hardware. MSFC–HDBK–527 is published from data in the database MAPTIS, (Materials and Processes Technical Information System), which will contain the most current and up–to–date information. When selecting materials from MSFC–HDBK–527, MAPTIS should be checked to assure the material ratings have not been updated following additional tests. NASDA maintains a similar database called J–MAPTIS. Materials specified in MSFC–HDBK–527, MAPTIS or J–MAPTIS (NASDA Materials and Processes Technical Information System) which are “A” rated of better may be used when an analysis of the use of the materials shows the application of the material within the accepted practice. When selecting materials based on test ratings, particular attention must be made to assure the materials meet the material safety requirements stated in NSTS 1700.7 ISS Addendum. The payload developer should coordinate with the local M&P team to assure the materials (regardless of rating) are used appropriately.

From Phase I lessons learned, it is suggested that developers provide a complete list of all the materials that may be used in developing hardware, even “second choice” materials, during the safety process. By providing a list which includes “second choice” materials, all materials, including substitute materials, will be analyzed and approved during the normal process. This will save work and speed the process should a “first choice” material be unavailable during construction requiring substitution late in the design.

4.10.1.1 STRESS CORROSION CRACKING

Stress Corrosion Cracking (SCC) may be defined as the combined action of sustained tensile stress and corrosion to cause premature failure of metallic materials. Some materials are more susceptible to SCC than others. Materials that fail due to SCC often fail at stresses much lower than would normally be expected, and do not necessarily show the corrosion effects visibly on the surface.

Metallic structural members and safety critical components should be constructed from materials that have a high resistance to SCC. MSFC–SPEC–522 rates metals for their resistance to SCC.

4.10.1.2 OFFGASSING OR TOXICITY

All flight hardware located in the habitable areas of ISS must meet the toxicity offgassing acceptance requirements specified in NHB 8060.1, test 7. The identities and quantities of volatile offgassed products from payload hardware must be determined and compared with NTB 8060.1, test 7. The test procedures do not specify at what assembly level the hardware is to be tested. Hardware may be tested anywhere from the individual material level to the full assembly level. When offgassing tests are conducted on anything lower than the fully assembled level, the results of the test should be added to determine the total offgassed products. Prescreening is strongly recommended for materials that may exceed the maximum allowable concentrations.

It should be noted that when the payload is tested at fully assembled level, no modifications at the assembly are permitted without retesting. If the hardware requires additional cleaning after the test, the methods and solvents must be exactly the same as was performed prior to the offgassing test. After testing, the hardware should be handled and stored in a way which will prevent contamination.

4.10.2 HOOK AND LOOP FASTENERS

Hook and Loop fasteners, commonly referred to by the trade name “Velcro,” may be used on ISS, as long as its use meets the safety requirements specified in NSTS 1700.7 ISS Addendum. Flammability must be addressed when hook and loop fasteners are used, as most hook and loop fasteners are made from materials which are flammable. NSTS 22648 specifies guidelines for the use of materials which do not pass the flammability test and should be used when considering the use of such materials. These guidelines include information about how much

material may be used at one time and the proximity of that material to other flammable material and heat sources.

The ISS program has tested one hook and loop fastener which rated well in the flammability and offgassing requirements specified in NSTS 17000.7 ISS Addendum. The material codes for these fasteners are 04377 for the hook and 64148 for the loop. Vendor information about this specific type of hook and loop fastener are listed in Tables 4.10.2–I and 4.10.2–II.

The hook and loop fasteners listed in Tables 4.10.2–I and 4.10.2–II have been tested and rated "A" for flammability in environments of 24.1% oxygen at 13.9 psia and 30% oxygen at 10.2 psia, however, this material is rated "X" above 30% oxygen. Offgassing tests showed this material to be "K" rated. When these materials are used, they must be lot numbered and subsequently traced.

TABLE 4.10.2–I PLAIN BACKED HOOK AND LOOP FASTENERS WHICH HAVE FAVORABLE FLAMMABILITY AND OFFGASSING CHARACTERISTICS

Name	Width	Part Number	Vendor	Notes
Loop Per MIL–F–21840 Type I, Class 2, color Natural	0.75 inch	Velcro **[TBD# 15]**	VELCRO USA, Inc.	Traceability Required
Hook Per MIL–F–21840 Type I, Class 2, color Natural	0.75 inch	Velcro 169094	VELCRO USA, Inc.	Traceability Required
Loop Per MIL–F–21840 Type I, Class 2, color Natural	1 inch	Velcro 192821	VELCRO USA, Inc.	Traceability Required
Hook Per MIL–F–21840 Type I, Class 2, color Natural	1 inch	Velcro 192826	VELCRO USA, Inc.	Traceability Required

TABLE 4.10.2–II ADHESIVE (ACRYLIC BASED) BACKED HOOK AND LOOP FASTENERS WHICH HAVE FAVORABLE FLAMMABILITY AND OFFGASSING CHARACTERISTICS

Name	Width	Part Number	Vendor	Notes
Loop Per MIL–F–21840 Type I, Class 2, color Natural	0.75 inch	Velcro 172179	VELCRO USA, Inc.	Traceability Required
Hook Per MIL–F–21840 Type I, Class 2, color Natural	0.75 inch	Velcro 172178	VELCRO USA, Inc.	Traceability Required
Loop Per MIL–F–21840 Type I, Class 2, color Natural	1 inch	Velcro 188033	VELCRO USA, Inc.	Traceability Required
Hook Per MIL–F–21840 Type I, Class 2, color Natural	1 inch	Velcro 188034	VELCRO USA, Inc.	Traceability Required

4.10.3 CONTAMINATION CONTROL

4.10.3.1 CLEANLINESS

Cleanliness on the ISS is defined as Visible–Clean Sensitive for internal equipment and Visible–Clean Standard for external equipment, both are defined in SN–C–0005. These

cleanliness levels are surface cleanliness levels and the process for determination of surface cleanliness is defined in SN–C–0005.

FED–STD–209, Airborne Particulate Cleanliness Classes In Cleanrooms and Clean Zones, defines the air cleanliness quality required for specific clean rooms. FED–STD–209 specifies the allowable airborne particulate levels and also specifies methods of measuring those levels.

A clean room is required to achieve surface cleanliness. The payload developers must determine the class clean room required as it will depend on many factors, including:

(1) Length of Time the Equipment Remains in the Room. Cleanrooms have some particles that are suspended in the air (how many and what size particles depends on the cleanroom class). The length of time the equipment will be in the room will influence the class of cleanroom required to meet the surface cleanliness because some of these airborne particles will precipitate from the atmosphere over time. The longer the equipment is in a cleanroom, the more contamination it will collect.

(2) Equipment Material. Some materials are more susceptible to attracting and capturing particles than others and some materials are easier to clean.

(3) Particle Size. Both the size of the particles in the air and the maximum allowable particle size on the equipment will influence the cleanroom class because suspended particles of different sizes will precipitate from the atmosphere at different rates. Smaller particles often tend to remain suspended in the atmosphere longer than larger particles.

(4) Cleanability of the Equipment. How easy the equipment is to clean will influence the cleanoom class because equipment whose surfaces (both internal and external) can easily be cleaned will not require as clean an atmosphere.

Often, clean tents, clean booths, or other covering process may be employed to protect the equipment and prevent contamination build–up. Covering the equipment, especially when the equipment will sit for long periods of time, can help maintain the cleanliness of the equipment.

Equipment in a clean room may require routine cleaning. The cleanliness of equipment delivered to KCS is inspected and maintained according to K–STSM–14.2.1, KSC Payload Facility Contamination Control Requirements/Plan and KCI–HB–5340.1, Payload Facility Contamination Control Implementation Plan.

There are several handbooks which contain information that may be useful to the payload developer in cleanroom classification, such as MIL–STD–1246 and MIL–HDBK–407. SN–C–0005 also contains good contamination control information.

4.10.3.2 ON–ORBIT CLEANING MATERIALS

The ISS program provides several cleaning materials which should be used by payload developers for general cleaning on orbit. The cleaning materials, their use and composition are

listed below. Note that there are other cleaners that will be used for kitchen utensil cleaning (SEG33107170–301 and SEG33107170–303).

Detergent Wipe Part NO. SEG39127170–302

Description:

- A white paper wipe with an aqueous solution used to support general cleaning.
- Particulate matter on surface becomes loosened by decreasing surface tension between the dirt and surface.
- Best wipe for soil removal.
- Packaged in quantities of 30 within a cartridge that installs into the wipe dispenser.
- Wipe material is Dupont 8801, a 55/45 wood pulp/polyester.
- Formula contains: 99.8% Deionized water; 0.1% Rewoteric AMB–14; 0.1% Kathon CG/ ICP II
- Approximately 6.3 grams of the use solution per wipe.

Weight: .69 lbs (.312 kg) per package

Volume: 33.75 cu in (553.1 cc) per package

Type: Consumable

Restraint: Wipes are contained within a cartridge that installs into the Wipe Dispenser, P/N SEG39129666–301.

Stowage: Standard Stowage Trays

Shelf Life: Two (2) years from manufacture

Development Lineage: EIS No. JSC 27096, JSC FCSD New Development for ISS

Disinfectant Wipe, Part No. SEG39127170–304

Description:

- A white paper wipe with a low–level broad spectrum disinfectant used to inhibit microbiological growth.

- Best wipe for cleaning Waste Management Compartment surfaces.
- Packaged in quantities of 30 within a cartridge that installs into the wipe dispenser.
- Wipe material is Dupont 8027, polyester.
- Formula contains: 2400 ppm active Barquat 4250Z (50%) EPA reg. no. 6836–26; Mixture of N–alkyl (C12–18) –N, N–dimethyl –N– benzyl ammonium chloride and N–alkyl (C12–14) –N, and N– dimethyl –N– ethylbenzyl ammonium chloride.

Weight: .64 lbs (.312 kg) per package

Volume: 33.75 cu in (553.1 cc) per package

Type: Consumable

Restraint: Wipes are contained within a cartridge that installs into the Wipe Dispenser, P/N SEG39129666–301.

Stowage: Standard Stowage Trays

Shelf Life: Two (2) years from manufacture

Development Lineage: EIS No. JSC 27096, JSC FCSD New Development for ISS

Dry Wipe, Part NO. SEG33107170–306

Description:

- A white paper wipe (Kim Wipe) used to support light cleaning.
- Absorbency is approximately 400% greater than the wipe's dry mass.
- Trap tear strength of 0.1 lbs.
- Packaged in quantities of 50 within a cartridge that installs into the wipe dispenser.

Weight: .20 lbs (90 g) per package

Volume: 79.8 cu in (1308 cc) per package

Type: Consumable

Restraint: Contained within a cartridge that installs into the Wipe Dispenser, P/N SEG39129666–301.

Stowage: Standard Stowage Trays

Durable Wipe, Part No. SEG33107170–305

Description:

- A white fabric wipe used to support moderate general cleaning.
- Absorbency is approximately 400% greater than the wipe's dry mass.
- Trap tear strength of 5.2 lbs.
- Packaged in quantities of 30 within a cartridge that installs into the wipe dispenser.

Weight: .27 lbs (122 g) per package

Volume: 79.8 cu in (1308 cc) per package

Type: Consumable

Restraint: Contained within a cartridge that installs into the Wipe Dispenser, P/N SEG39129666–301.

Stowage: Standard Stowage Trays

Development Lineage: EIS No. JSC 27096, JSC FCSD New Development for ISS

4.11 HUMAN FACTORS

The USL has been developed to accommodate payloads with human interface for ground handling and on–orbit operations, in accordance with criteria which insure that the full range of crewmembers can operate the payloads, and perform all normal, maintenance, and emergency operations.

4.11.1 STRENGTH

The strength required to operate, replace, remove, and maintain payloads will be designed such that the 5th percentile Japanese female crewmember can perform all required tasks. Grip strength, linear forces, and torque are specified.

4.11.2 BODY ENVELOPE AND REACH ACCESSIBILITY

The integrated racks and payloads are designed and arranged to provide access for all installation, operations, and maintenance tasks for the full range of crewmembers from 5th percentile Japanese female to 95th percentile American male. Combined body and tool access are provided.

4.11.3 HABITABILITY

Access to replacement items (such as filters which require periodic maintenance), and protection against spills or vaporization are provided. Surface materials are selected for maintainability and to avoid contamination. Touch temperatures, acoustic noise limits, colors, and illumination are specified.

4.11.4 STRUCTURAL/MECHANICAL INTERFACES

The aisle is normally clear for crewmember access. When intermittent or temporary protrusions are required, these are controlled according to the time duration that will be required. This is controlled by SSP 41017, and any unique payload ICDs. Access to the fire suppression port is protected as specified in SSP 57000, Figure 3.12.4.1.1–1. Design and arrangement of payload hardware shall accommodate crewmember tasks for forces, access, and ease of operation as well as protection against incorrect connections. Fastener specifications, including the need for captive fasteners and usability by one hand, are indicated.

4.11.5 CONTROLS AND DISPLAYS

Layout, spacing, protection against accidental operation, and manner of indication are specified to minimize errors and to avoid ambiguous indications to the crewmember. Special purpose controls such as hand controllers, valves, and toggle switches are also addressed.

4.11.6 RESTRAINTS AND MOBILITY AIDS

Standard restraints and mobility aids are provided such that all installation, operation, and maintenance can be performed. Payload developers are requested to utilize these standard restraints and mobility aids for on–orbit use. Latching and unlatching of stowage drawers design accommodates the 5th percentile Japanese female through the 95th percentile American male crewmember. Handle access and design is specified.

4.11.7 IDENTIFICATION LABELING

The Inventory Management System (IMS) labels are provided for ground handling, inventory management and verification for consumables, loose equipment, ORUs, and other equipment that may require refurbishment or handling. Each hardware provider assigns IMS numbers and these are centrally controlled in the SSP Vehicle Master Data Base (VMDB). The criteria for labeling payloads and switches within standards is specified in SSP 57000 Appendix C.

The criteria for labeling payloads, switches, within standards is specified in JSC 27260, Decal Process Document Catalog, Part II. The ease of understanding the labels and decals is addressed considering the readability, placement, and equipment to be identified. The development of special labels dealing with Caution and Warning are specified. Fonts and color are specified.

4.11.8 CREW SAFETY

A range of considerations to ensure crew safety are provided including electrical hazards, sharp edges and corners protection, design criteria for covering of holes, latch selection, exposed threads of screws and bolts, securing pins, levers and cranks, and crewmember egress paths and payload protection against false alarms, per NSTS 1700.7.ISS Addendum paragraph 205.

4.11.9 ON–ORBIT ACOUSTICS

ISS acoustic noise requirements have been established for an integrated ISS module. The NC–50 noise curve criteria was selected based upon several considerations, notably the following: hearing acuity, speech intelligibility, habitability, safety, productivity, annoyance, and sleep interference. Reference 1 describes the findings that were mandated as the National Aeronautic and Space Administration’s requirements for acoustics on board the ISS.

Since total acoustic noise environment in an ISS module is the sum of all noise contributors, the NC–50 noise criteria must be suballocated to the noise–making components within the ISS module. Subsections below discuss suballocation of the module noise criteria to individual racks, to components in a rack, and to non–rack components.

4.11.9.1 INTEGRATED RACK ALLOCATION

The NC–50 noise criteria, applicable to an ISS module, has been suballocated in Section 3.12.3.3 of SSP 57000 to individual components in the module (e.g., integrated rack). This suballocation of the acoustic noise environment to each integrated rack will be instituted as design requirements and will apply to the composite noise level of the noisiest configuration of simultaneously–operating components within the rack (including any supporting adjunct active portable equipment operated outside the integrated rack but within the ISS module).

Acoustic noise limits are defined for two types of noise sources: (1) Continuous Noise Source and (2) Intermittent Noise Source. An integrated rack that operates for more than eight hours in a 24 hour period and generates an A–weighted Sound Pressure Level (SPL) equal to or in excess of 37 decibels (dBA) measured at 0.6 meter distance from the noisiest part of the rack is a Continuous Noise Source. An integrated rack which operates for less than eight hours in any 24 hour period and generates an A–weighted SPL equal to or in excess of 37 dBA measured at 0.6 meter distance from the noisiest part of the rack, is an Intermittent Noise Source. Further information is given in Section 3.12.3.3. of SSP 57000 concerning acoustic noise limits for hardware that exhibits both continuous and intermittent noise characteristics.

4.11.9.2 SUBRACK ALLOCATION

Acoustic noise limits, provided in Section 3.12.3.3. of SSP 57000 for individual integrated racks, will be further suballocated to subrack components by the rack integrator such that the acoustic noise of the composite rack will not exceed limits defined in SSP 57000.

4.11.9.3 NON–RACK ALLOCATION

Acoustic noise limits of non–rack components, operated independently of and outside the integrated rack are allocated the same limits imposed for an integrated rack. (Reference Section 3.12.3.3. of SSP 57000). Note that any external adjunct equipment that is operated in support of the integrated rack is included with the integrated rack discussed in paragraph 4.11.9.1 of this PAH.

4.12 STOWAGE

Payload stowage allocations are defined in the Increment Definition and Requirements Document (IDRD) and the Payload Integration Agreement (PIA). There are three types of environmental conditioning available for stowage items: ambient, refrigerated/frozen (+4C/–20C), and frozen at low temperature (–80C). Stowage items may be accommodated within the payload integrated rack design, ISS stowage racks, or ISS refrigerator/freezers. Stowage accommodations are based on the Middeck Locker volume/dimension Equivalents (MLE).

4.12.1 AMBIENT STOWAGE ACCOMMODATIONS

Individual payload hardware items which are to be stowed for the transportation phase or while not in use on–orbit are to be packed in Cargo Transfer Bags (CTB), ISS Stowage Trays, or M–bags. The CTB is a fabric transport enclosure which is designed to fit into a Middeck locker, or M–bag. The CTB is equipped with configurable dividers to provide separation and cushioning between individual hardware items. The CTB is depicted in Figure 4.12.1–1. ISS Stowage Trays are designed to be modular and interchangeable and there are 11 different sizes of trays to support a variety of cargo types. The ISS Stowage Trays are depicted in Figure 4.12.1–2. The M–bags are designed to contain CTBs, ISS Stowage Trays, or odd/large size payload items. There are 2 types of M–Bags, M1 and M2. The M1–bag will contain up to 6 Middeck Locker Equivalent (MLE) of cargo, the M2–bag will contain up to 4 MLE of cargo. The M–bags are depicted in Figure 4.12.1–3. The Payload hardware packed in CTBs, ISS Stowage Trays, or M–bags will be transported to the ISS in either a Resupply Stowage Platform 1 (RSP1), RSP2, or Resupply Stowage Rack (RSR). The capabilities of the transportation carriers are provided in Table 4.12.1–1. The RSP, RSP2, RSR, are depicted in Figures 4.12.1–4, 4.12.1–5, and 4.12.1–6 respectively. On board the ISS payload hardware will be stowed in a Zero–G Stowage Rack (ZSR), or within available volumes in Facility racks.

TABLE 4.12.1–I NITROGEN, GRADE B, REQUIREMENTS AS DELIVERED TO THE SHUTTLE INTERFACE ON THE GROUND (FROM SSP 30573A)

Characteristics	Requirements As Delivered to Interface
Purity	99.99% by volume (min) by indirect method
Total Impurities	100 ppm (max)
Total Hydrocarbons (as methane) (Note 2)	5.0 ppm (max)
Halogenated Solvents	5 ppm (max)
Oxygen	50 ppm (max
Argon	N/A
Moisture	11.5 ppm (max)
Particulate	None
Carbon Dioxide	5 ppm (max)
Carbon Monoxide	5 ppm (max)
Aromatic Hydrocarbons (as Benzene)	0.5 ppm (max)
Halogenated Hydrocarbons	1 ppm (max)
Chlorinated Hydrocarbons	0.1 ppm (max)
Nitrous Oxide	1 ppm (max)
Odor	None detectable
Other impurities	Notes 1, 2, and 3

Note 1: Analysis procedures for impurities will be per MIL–STD–1564.

Note 2: For ECLS ground test only, total hydrocarbons as methane – 50 ppm max.

Note 3: Other impurities discernible from instrument noise will be identified and quantified.

4.12.1.1 CARBON DIOXIDE

The JEM provides pressurized carbon dioxide gas as an ISPR interface at the four rack locations designated as life sciences locations. These are the four rack locations closest to the Node 2 hatch. Carbon dioxide is provided from two bottles in the Common Gas Supply Equipment (CGSE) rack, see Figure 4.12.1.1–1, Common Gas Supply Equipment (CGSE) Rack in JEM. Each bottle is capable of containing 218 standard liters of carbon dioxide at a maximum pressure of 3.5 MPa (508 psia) **[TBR]**.

The CGSE rack contains a pressure regulator to control the pressure range of the carbon dioxide at the CGSE rack interface to the distribution system to be 586 to 768 kPa (85 to 114 psia). The pressure range specified at the payload interface is 517 to 768 kPa (75 to 114 psia). The CGSE rack contains two pressure relief valves downstream of the pressure regulator and an emergency shut–off valve upstream of the pressure regulator. The Maximum Design Pressure (MDP) of the carbon dioxide distribution system is 1.8 MPa (200 psia).

The carbon dioxide distribution system does not control or measure flow rate. The payload has the responsibility to provide on/off control of the carbon dioxide flow and to ensure that the flow rate does not exceed the maximum allowable flow of five Standard Liters Per Minute (SLPM) while in the specified pressure range.

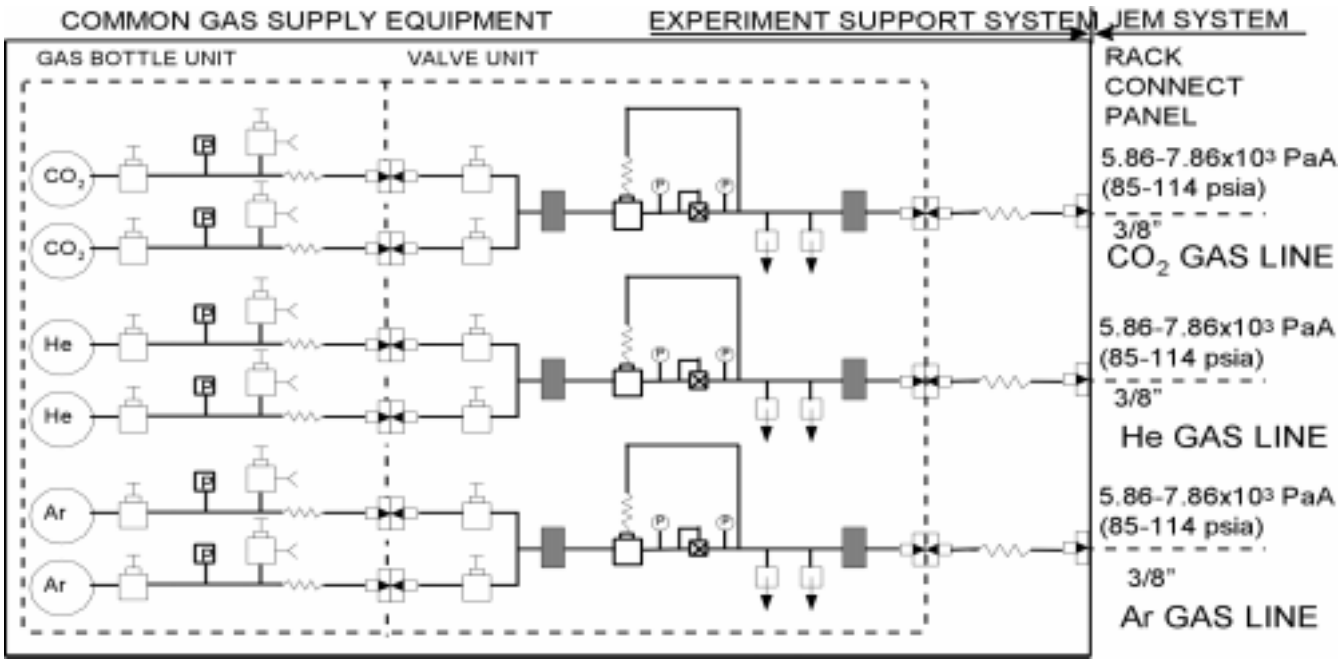

FIGURE 4.12.1.1–1 COMMON GAS SUPPLY EQUIPMENT (CGSE) RACK IN THE JEM

4.12.1.1.1 HELIUM

The JEM provides pressurized helium gas as an ISPR interface at the six rack locations designated as material sciences locations. These are the six ISPR locations farthest from the Node 2 hatch. Helium is provided from two bottles in the CGSE rack, see Figure 4.12.1.1–1. Each bottle is capable of containing 1144 standard liters of helium.

The CGSE rack contains a pressure regulator to control the pressure range of the helium at the CGSE rack interface to the distribution system to be 586 to 768 kPa (85 to 114 psia). The pressure range specified at the payload interface is 517 to 768 kPa (75 to114 psia). The CGSE rack contains two pressure relief valves downstream of the pressure regulator and an emergency shut–off valve upstream of the pressure regulator. The MDP of the of the helium distribution system is 1.8 MPa (200 psia).

The helium distribution system does not control or measure flow rate. The payload has the responsibility to provide on/off control of the helium flow and to ensure that the flow rate does not exceed the maximum allowable flow of 20 SLPM while in the specified pressure range.

4.12.1.1.2 ARGON

The JEM provides pressurized argon gas as an ISPR interface at the six rack locations designated as material sciences locations. These are the six ISPR locations farthest from the Node 2 hatch. Argon is provided from two bottles in the CGSE rack, see Figure NO TAG. Each bottle is capable of containing 1144 standard liters of argon.

4.12.1.1.3 PAYLOAD PROVIDED GAS BOTTLES

Payloads may need to provide their own pressurized gas bottles to support specific experimental needs. The internal volume of the ISS is large enough, and most anticipated payload gas bottles are small enough, that release of all the gas into the ISS atmosphere will not cause an over–pressure condition to occur. However, these bottles will likely be transported to orbit in the MPLM and leakage of gas may cause an over–pressure of the MPLM structure if a sudden release occurs.

The MPLM has three Positive Pressure Relief Assemblies (PPRA). These PPRAs have a specified maximum flow rate when fully open. Potential barometric conditions at Kennedy Space Center (KSC) can affect the MPLM internal pressure prior to launch such that during transportation to the ISS thermal conditions may cause the internal pressure rise enough that the PPRAs open. If a piece of debris is caught in the valve it may not reseat properly. This could allow the MPLM to become depressurized. Concern for this event has lead to the cracking pressure of the PPRAs being raised from 14.9 psia to 15.05 psia. If it is assumed that the cracking pressure of the PPRAs has been reached even before a leak in a payload pressurized gas bottle, then we must calculate how much gas can be released into the cabin before the module MDP, 15.2 psia, is reached. Assuming an internal free volume of 47 m^3, this leads to a maximum gas bottle volume of 400 standard liters where standard conditions are assumed to be 1 atmosphere pressure and 0°C temperature.

A case may arise where a payload requires a pressurized gas source to have a quantity of gas greater than 400 standard liters. Then, an additional hazard control must be imposed by design that limits the flow to less than the ability of the module to vent in case of overpressure. The limiting case for this condition is the JEM. The JEM pressure relief valves have a maximum capacity to vent 240 SLPM. Thus, if a pressurized gas bottle is limited to leaking gases at a rate of 240 SLPM, then the JEM will never be caused to exceed it’s MDP.

In summary, pressurized gas bottles must be limited to a maximum leak rate of 240 SLPM is their gas volume greater than the equivalent of 400 standard liters.

In summary, pressurized gas bottles must be limited to a maximum leak rate of 240 SLPM is their gas volume greater than the equivalent of 400 standard liters.

Discharge of the bottle contents into the ISS atmosphere may cause other concerns. These bottles and their contents will need to meet all of the safety requirements specified in NSTS 1700.7 ISS Addendum and will have to be addressed in the payload Hazard Reports or Safety Data Packages.

Bottles being transported to orbit in the Space Shuttle middeck will have to comply with the shuttle payload safety requirements of NSTS 1700.7.

4.12.1.2 ATMOSPHERIC GASES

The ACS provides cabin atmospheric pressure control, storage, regulation, and distribution of nitrogen and oxygen, recharging of nitrogen/oxygen tanks with Shuttle resources, overpressure relief, pressure equalization, and rapid depressurization detection.

ACS functions are performed using a Pressure Control Assembly (PCA), Manual Pressure Equalization Valves (MPEV), Positive Pressure Relief Valves (PPRV), Oxygen Recharge Compressor Assembly (ORCA) in the Airlock, and various regulators and valves.

The PCA includes a Pressure Control Panel (PCP), a Vent/Relief Valve (VRV), and an embedded Computer Software Configuration Item (CSCI). The PCA receives nitrogen and oxygen from the nitrogen and oxygen distribution system. It vents cabin air to space via a non–propulsive overboard vent.

The PCP is an Orbital Replaceable Unit (ORU) that includes one Oxygen Isolation Valve (OIV), one Nitrogen Isolation Valve (NIV), one Firmware Controller (FC), two nitrogen/oxygen line pressure sensors, two nitrogen/oxygen flow restrictors, and one nitrogen/oxygen discharge diffuser and duct. A Cabin Pressure Sensor (CPS) is integral to the FC.

The Vent/Relief Valve includes two valves mounted in series in a single housing: The Vent/Relief Isolation Valve (VRIV), and the Vent/Relief Control Valve (VRCV). Each valve is independently powered and controlled from the PCP FC. The VRV provides a 2.2 inch diameter flow passage between the internal cabin atmosphere and the external space environment, where it interfaces to a non–propulsive vent. A 1 inch diameter vacuum access port is provided in between the VRIV and VRCV.

Application Software embedded in the PCP FC controls the PCA functionality, including Cabin Pressure Monitoring, nitrogen/oxygen Introduction, Emergency Vent, Controlled Depressurization, Controlled Repressurization, and Positive Pressure Relief (PPR).

The controlling software for the ACS is in the Internal Systems MDM in the USL. All crew commanding of PCA functions is via the ACS software in the Internal Systems MDM; All status from the PCA and NIV is reported through the Internal Systems MDM. Caution & Warning messages for the Airlock ACS subsystem failures are initiated by the ACS software in the Internal Systems MDM.

The ACS software initiates Caution & Warning messages for out–of–tolerance cabin pressure, and for out–of–tolerance nitrogen/oxygen distribution system pressure. A Class 1 Emergency message is initiated when a rapid decompression is detected.

4.12.1.2.1 TOTAL AND PARTIAL PRESSURES

The ACS software in the USL uses the oxygen partial pressure reading from the Major Constituent Analyzer (MCA) of the Atmosphere Revitalization subsystem along with the CPS total pressure reading to control introduction of nitrogen and/or oxygen to maintain the cabin total pressure between 14.2 and 14.9 psia, see Figure 4.12.1.2.1–1, Atmospheric Pressure Regime for ISS.

The nitrogen partial pressure is not to exceed 11.6 psia. The limit is to support the Russian prebreathe protocol to allow rapid EVA within 25 minutes. If the nitrogen partial pressure is maintained below 1.6 psia, then the Russian cosmonaut using the ORLON suit can go EVA within 30 minutes and without a prebreathe period for denitrogenation. The Russian ORLON suit operates at a higher suit pressure than then US EVA suits.

Atmospheric oxygen is provided by electrolysis of water. The Russian Segment and the United States Orbital Segment (USOS) both provide this capability. The oxygen stored in high pressure tanks on the Airlock is not sufficient for crew metabolic purposes except in contingency situations. The ISS oxygen partial pressure is controlled to be within the range of 2.83 to 3.35 psia. The percent of oxygen in the atmosphere cannot exceed 24.1% for materials flammability purposes.

Figure 4.12.1.2.1–2, Comparison of ISS, Houston, and Denver Oxygen Partial Pressures, shows a comparison of the ISS oxygen partial pressure range with histograms of the calculated oxygen partial pressures for Houston and for Denver. The histograms were derived from hourly barometric pressures for one year collected from Denver's Stapleton Airport and Houston's George Bush Intercontinental Airport.

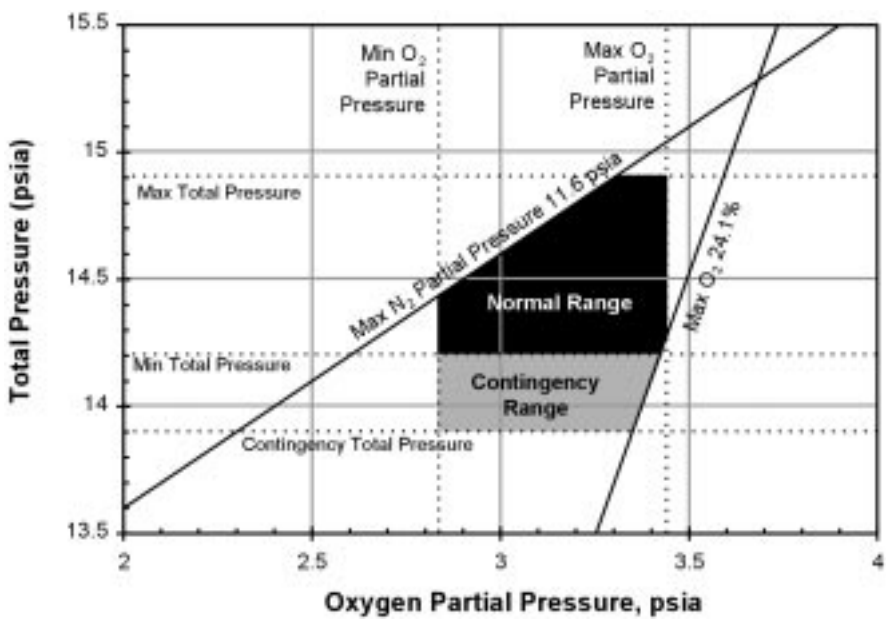

FIGURE 4.12.1.2.1–1 ATMOSPHERIC PRESSURE REGIME FOR ISS

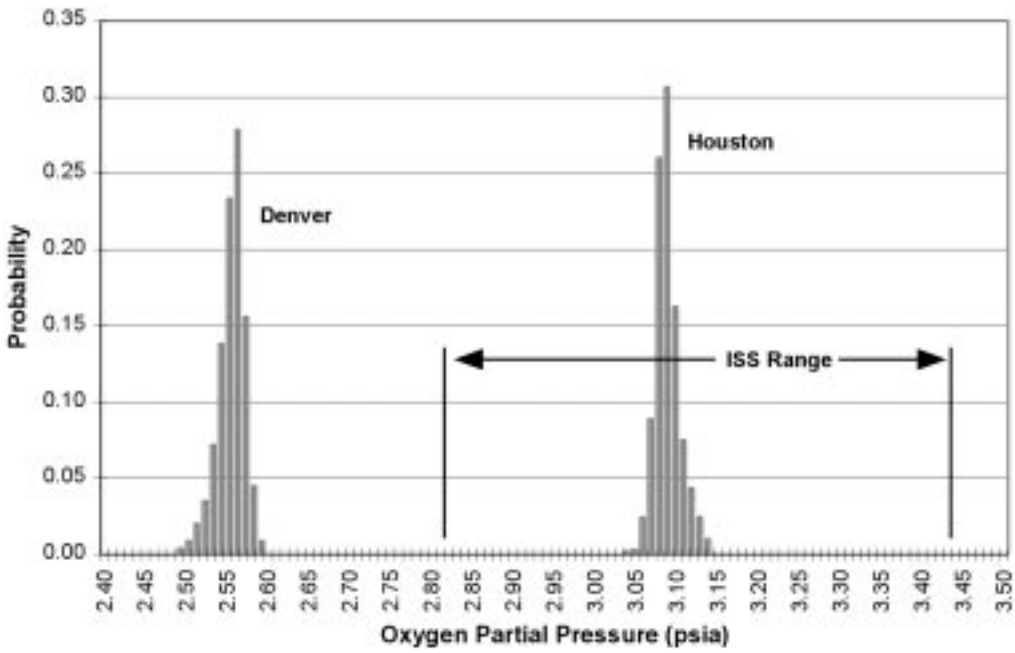

FIGURE 4.12.1.2.1–2 COMPARISON OF ISS, HOUSTON AND DENVER OXYGEN PARTIAL PRESSURES

4.12.1.2.2 NITROGEN

Payload use of atmospheric nitrogen will likely be limited to nitrogen vented overboard by the VES. Payloads evacuating volumes will be required to estimate the amount of atmospheric nitrogen that is vented overboard and record this value in the Payload Integration Agreement. Nitrogen lost in this manner will be counted toward the total payload use of pressurized nitrogen stored in the high pressure tanks on the Airlock.

4.12.1.2.3 OXYGEN

Payloads will consume atmospheric oxygen either by venting atmosphere using the VES, by specimen metabolism, or by combustion. The ISS life support system is designed to provide 2.38 lb_m/day of oxygen for experiment use. This amount of oxygen can only be provided after the USOS Oxygen Generator Assembly (OGA) is on–orbit and if there is sufficient water available for electrolysis. The OGA is expected to be delivered to orbit by flight 17A, late 2002.

Limited amounts of oxygen can be provided to the cabin atmosphere for support of experiments from the high pressure storage tanks on the Airlock, but that oxygen is reserved mostly for support of EVAs, medical emergencies, and for emergency conditions requiring the use of breathing masks such as chemical spills. This oxygen is resupplied to the tanks using shuttle reserves. The shuttles provides the pressurized oxygen to the ISS at 500 psia. The ORCA, located in the Airlock, pressurizes it to 2700 psia prior to storage in the external tanks.

4.12.1.2.4 ATMOSPHERIC CARBON DIOXIDE CONCENTRATION

4.12.1.2.4.1 CARBON DIOXIDE REMOVAL ASSEMBLY (CDRA)

Carbon dioxide is removed from the ISS cabin atmosphere by the Carbon Dioxide Removal Assembly (CDRA) and is vented to space. The CDRA utilizes molecular sieve technology to selectively remove carbon dioxide from the atmosphere via the cabin air ventilation system. Major components of the open loop CDRA are: two desiccant beds, two sorbent beds, a blower, a precooler (air–water heat exchanger), six selector valves, two check valves, and an air pump. A schematic diagram of the CDRA is shown in Figure 4.12.1.2.4.1–1.

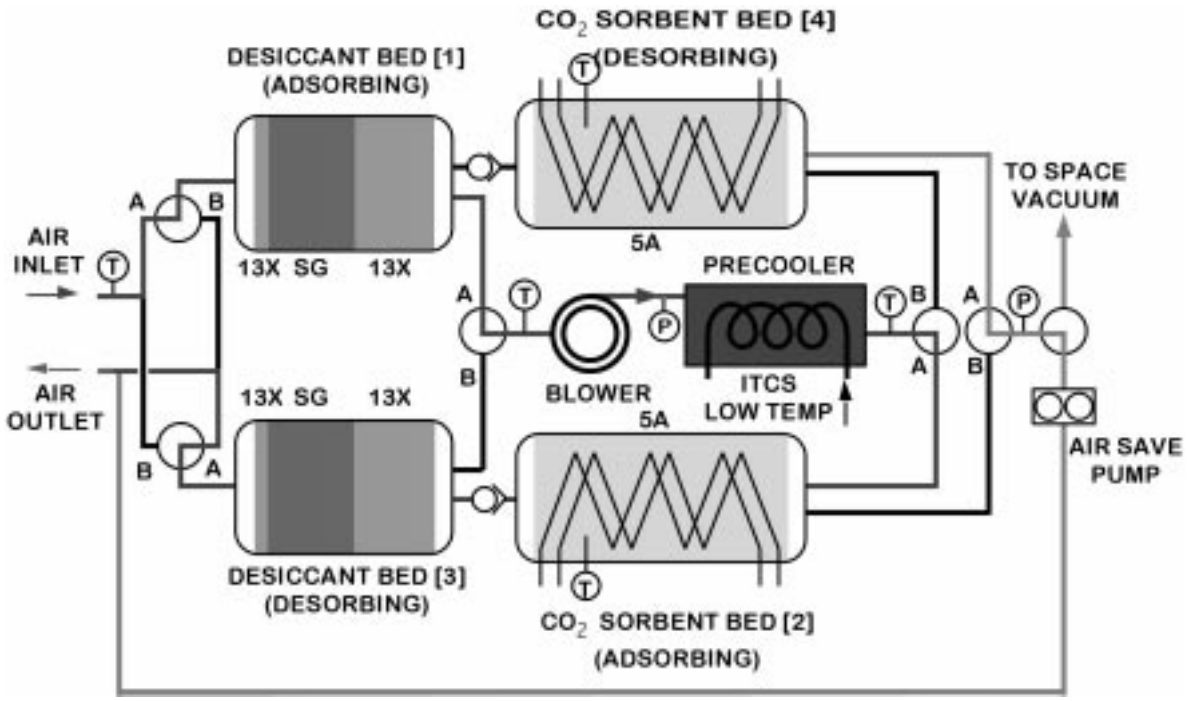

FIGURE 4.12.1.2.4.1–1 SCHEMATIC OF THE CARBON DIOXIDE REMOVAL ASSEMBLY (CDRA)

The blower, mounted downstream of the desiccant beds, draws module air laden with water vapor and carbon dioxide into the CDRA from the exit of the condensing heat exchanger of the Temperature and Humidity Control (THC) subsystem. The cool, humid air enters a desiccant bed [1] where the water is absorbed. This desiccant bed comprises two materials; silica gel and 13X zeolite. Water is more strongly attracted to the sorbent material than carbon dioxide, so it is necessary to first remove the water vapor from the air before effective carbon dioxide adsorption can take place. Air leaves the desiccant bed with a dew point no greater than –62 °C (–79 °F). The air heats up as water vapor is removed (due to the heat of adsorption) and leaves the desiccant bed at 21 to 35 °C (70 to 95 °F). The water vapor that is adsorbed to the desiccant will be returned to the cabin air during the next half–cycle, thus the water mass on the ISS is conserved.

The dry air is drawn into the blower and through the precooler where the heat of compression, the heat generated by the blower motor, and the heat of adsorption generated in the desiccant bed are removed. The cool, dry air is then directed into an sorbent bed [2] where carbon dioxide is selectively removed and the air is heated as it passes through the hot bed material, type 5A zeolite. Finally, the process air enters a second desiccant bed [3] where it is re–humidified and cooled, driving off the water that was deposited there during the previous half cycle. This regenerates the desiccant bed. The warm humid air is then directed back into the cabin air THC duct upstream of the condensing heat exchanger.

As one carbon dioxide removal bed [2] adsorbs carbon dioxide, the second bed [4] is desorbing using thermal energy and space vacuum. At the beginning of this process the air save pump removes the residual air from the sorbent cannister and returns the air to the process air outlet. This step is taken to conserve oxygen and nitrogen resources. Next, the pump is turned off and the bed is exposed to space vacuum to facilitate carbon dioxide desorption. Heat, generated by electric heaters imbedded in the sorbent bed, helps to drive off the carbon dioxide. The heat is also required to drive the bed temperature to approximately 250°F so that air passing through it during the next half cycle will be heated enough to desorb the water in the downstream desiccant bed.

When the half–cycle time is completed, the valves switch position and another half–cycle begins The air then flows through the beds in the sequence [3]–[4]–[1] and bed [2] is heated and vacuum desorbed of carbon dioxide. The combination of the two half–cycles creates a completely regenerable, continuous carbon dioxide removal function for the ISS. Figure 4.12.1.2.4.1–2 shows the dynamic effect of the half–cycles on the USL atmosphere carbon dioxide concentration. This is a sample case with a metabolic load of 5.25 Man–Equivalents (MEQ).

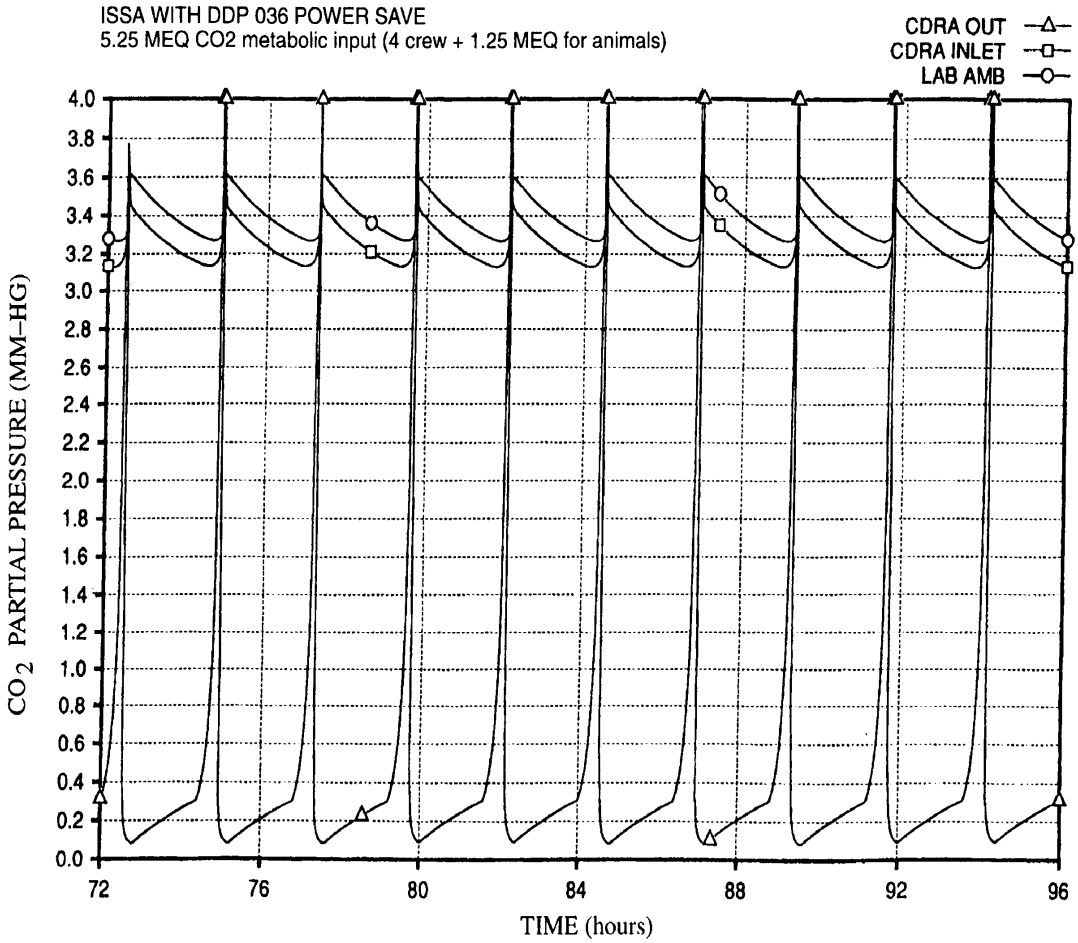

FIGURE 4.12.1.2.4.1–2 EXAMPLE OF THE DYNAMIC EFFECT OF THE CDRA HALF–CYCLE ON USL CABIN ATMOSPHERIC CARBON DIOXIDE CONCENTRATION

The Russian Segment (RS) will have carbon dioxide removal systems that are also cyclic and regenerable, but use a solid amine sorbent material. The RS CDRAs operate with a different design philosophy. While the USOS CDRAs will operate to drive the carbon dioxide concentration to the lowest possible level, the RS CDRAs work to maintain a set point. The RS CDRA has a variable speed blower to change the rate of a air flow through the sorbent beds. The crew can select a CO_2 concentration set–point, typically 5.0 mm Hg, and the RS CDRA will vary the air flow rate to achieve the desired concentration. There will be four carbon dioxide removal systems on ISS at Assembly Complete; one CDRA in the USL, one CDRA in Node 3, and two Russian CO_2 removal systems in the Russian Segment.

4.12.1.2.4.2 ANTICIPATED CARBON DIOXIDE CONCENTRATIONS

The concentration of carbon dioxide in the atmosphere of a given module that a payload will be exposed to will depend upon a number of factors; the total number of crew members on the ISS, the number of crew members in that module and the length of time they stay, activities the crew

members may be engaged in such as exercise, the number of carbon dioxide removal systems that are operating at a given time, and the effectiveness of the inter–module ventilation system. We must rely at this time entirely on test–correlated simulation models to predict the on–orbit carbon dioxide concentrations.

Prior to the deployment of Node 3 to the ISS there will be two carbon dioxide removal systems on the ISS; one in the USL and one in the Russian Service module. This early configuration will experience times of low power availability. Equipment will be shut off as needed to ensure the power demand does not exceed the generation capability. The top priority in selecting which equipment must remain operational is the safety of the crew and vehicle. Payload operations are secondary.

Normally, both the Russian carbon dioxide removal system and the USL CDRA will be operated. When low power situations occur, the USL CDRA may be shut down.
Table 4.12.1.2.4.2–I shows carbon dioxide levels a payload is predicted to experience as it comes to orbit in the shuttle middeck and is installed into the ISS during this early time frame.

TABLE 4.12.1.2.4.2–I CARBON DIOXIDE CONCENTRATION 24–HOUR AVERAGE EXPOSURE PRIOR TO NODE 3 BEING ON–ORBIT

Timeframe	CO_2 Partial Pressure, mm Hg
On orbiter prior to docking, CO_2 removal by orbiter LiOH	< 4
On Orbiter and ISS after docking, orbiter LiOH and USL CDRA	2.5 to 3.7
On ISS after orbiter undocking** Russian CO2 removal only Russian CO2 removal and USL CDRA	< 5.3 2.4 average

** Choice depends upon available power

The carbon dioxide removal capability at Assembly Complete is substantially better. The ISS Program Office has agreed to allow both CDRAs in the USOS to be operated simultaneously for two ninety–day periods each year to lower carbon dioxide concentrations in the ISS to reach levels that are more acceptable to life sciences.

A set of simulations was run at the request of the Payloads Office which used exercise protocols similar to JSC biomedical operations requirements and a statistical model of crew movements through the station. These simulations were run to predict the carbon dioxide concentration if both USOS CDRAs were operated. The number of animals assumed to be on the ISS was two thirds of the maximum possible and assumed to reside entirely in the Centrifuge Accommodations Module (CAM). The crew was partitioned into two crew members who stayed exclusively in the USOS, two who stayed exclusively in the RS, and two who worked in both segments but slept in the USOS. The crew members moved around the ISS performing tasks for either experiments or maintenance. The mean exposures over one week of time is summarized in Table 4.12.1.2.4.2–II.

TABLE 4.12.1.2.4.2–II 24–HOUR AVERAGE EXPOSURE TO CO_2 CONCENTRATIONS BY ISS CREWMEMBERS AT ASSEMBLY COMPLETE

CDRA Locations and Performance	Crew in USOS only	Crew in USOS and RS	Crew in RS only
CDRAs on in Node 3 and USL, RS set at 5 mm Hg	2.07	2.12	2.31
CDRAs on in Node 3 and USL, RS CDRAs at minimum speed	1.68	1.69	1.69

4.12.1.2.5 ATMOSPHERIC HUMIDITY

Atmospheric water vapor is required to be maintained within 25 and 75 percent relative humidity and within 4.4 and 15.6 °C (40 and 60 °F) dewpoint. This function is performed by the Temperature and Humidity Control (THC) system. The THC subsystem ensures that the temperature and humidity levels in the cabin atmosphere are within the design specifications. Heat enters the atmosphere from the crew (metabolically generated heat) and equipment (lights, etc.; although, much of the equipment–generated heat is removed by cold–plates). Humidity enters the atmosphere primarily from the crew respiration and perspiration with some contribution from payloads that exchange air with cabin to support living specimens.

The Common Cabin Air Assembly (CCAA), Figure 4.12.1.2.5–1, provides the capability to control the cabin air temperature in response to cabin air temperature control settings, to maintain the cabin air humidity level within limits, and to generate ventilation airflow. A temperature sensor, located in the cabin return ducting, provides electronic signals proportional to the sensed cabin air temperature. Filtered air is drawn from the cabin by the cabin fan. The cabin fan provides the necessary head rise to move air through the CCAA as well as the cabin and system ducting. The cabin temperature is controlled to a crew selectable setpoint temperature by positioning the proportional valve using a PI control scheme based on the error between the inlet temperature signal and the cabin set point. The position of the proportional valve determines the flow split between the condensing heat exchanger (CHX) and the bypass ducts. Heat and moisture are removed from the portion of the air flow directed through the CHX. The heat removed from the air is transferred to the coolant water loop. Bypass air and CHX airflow streams are then mixed downstream of the proportional valve and cool, dehumidified air is returned to the cabin through the outlet housing. The condensed moisture, along with some air, is drawn from the CHX by the air/water separator where condensate and air are separated. The condensate is delivered to the condensate bus while the air is returned to the outlet housing air stream.

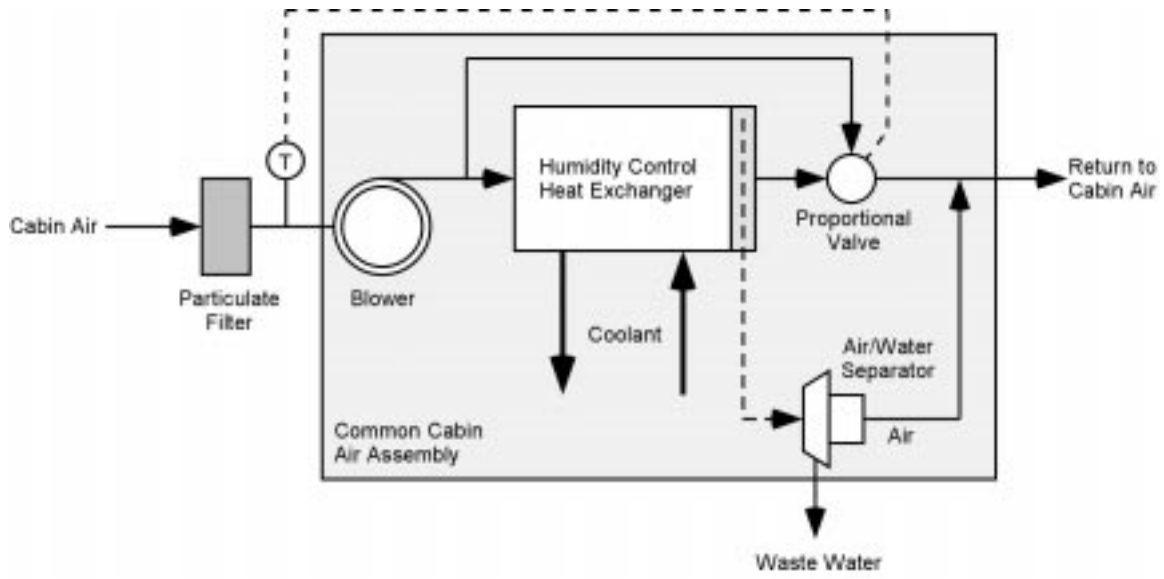

FIGURE 4.12.1.2.5–1 TEMPERATURE AND HUMIDITY CONTROL SUBYSYSTEM

It is important to note that temperature is selectable, but humidity is not. The amount of humidity removed depends upon the amount of air that is bypassed around the CHX. Thus, the humidity of the cabin air depends upon the amount of humidity generated and the sensible heat load being removed by the CHX. Figure 4.12.1.2.5–2 shows the relationship of sensible heat load on the CHX to the cabin air humidity. If the heat load is low, then most of the air bypasses the CHX and very little moisture is removed from the air. If the heat load is high, then a greater proportion of the air passes through the CHX and more moisture is condensed out of the air.

[TBS]

FIGURE 4.12.1.2.5–2 CABIN RELATIVE HUMIDITY AS A FUNCTION OF CHX SENSIBLE HEAT LOAD

4.12.1.2.6 ATMOSPHERIC TEMPERATURE

The THC system described in the previous section controls the temperature in the USL. The USL is required to monitor the cabin temperature in the range of 60 °F to 90 °F within 1 °F accuracy for temperature control purposes. The Lab must issue a caution when the cabin aisleway temperature exceeds an upper threshold, currently set at 84 °F to alert of potential problems with airborne heat loads.

The Lab is required to control temperature within 65 °F to 80 °F within 2 °F accuracy of the crew selected temperature. Therefore, the potential temperatures the payloads in the USL may be exposed to are in the range of 63 °F to 82 °F. The JEM and APM have the same temperature requirements and contain heat and humidity removal equipment similar in function to the CCAA, but the operating characteristics may vary from that described in the previous section.

The Node 1 temperatures may range from 65 °F to 85 °F. The temperature in this module is not selectable by the crew. It is parasitic to the USL CCAA and receives a portion of the cool air provided by the CCAA to the USL.

The atmosphere of the MPLM is not actively conditioned. When it is connected to the ISS, the atmosphere is conditioned entirely by Inter–Module Ventilation (IMV) from Node 2. When it is not connected to Node 2 there is no atmospheric conditioning and the cabin atmosphere temperature will depend upon conditions on the ground, in the orbiter cargo bay, or in space when being transferred between the ISS and the orbiter cargo bay. Table 4.12.1.2.6–I summarizes the temperatures for the various modules and for the MPLM in various operating modes.

TABLE 4.12.1.2.6–I ATMOSPHERIC TEMPERATURES IN THE ISS AND THE MPLM

ISS Atmospheric Temperatures	Value
Cabin air temperature in USL, JEM, APM, and CAM	17 to 28 °C (63 to 82 °F)
Cabin air temperature in Node 1	17 to 31 °C (63 to 87 °F)
MPLM Air Temperatures	Active Flights
Pre–Launch	14 to 30 °C (57.2 to 86 °F)
Launch/Ascent	20 to 30 °C (68 to 86 °F)
On–orbit (Cargo Bay + Deployment)	16 to 46 °C (60.8 to 114.8 °F)
On–orbit (On–Station)	16 to 43 °C (60.8 to 109.4 °F)
On–orbit (Retrieval + Cargo Bay)	11 to 45 °C (51.8 to 113 °F)
Descent/Landing	10 to 42 °C (50 to 107.6 °F)
Post–Landing	10 to 42 °C (50 to 107.6 °F)
Ferry Flight	15.5 to 30 °C (59.9 to 86 °F)
	Passive Flights
Pre–Launch	15 to 24 °C (59 to 75.2 °F)
Launch/Ascent	14 to 24 °C (57.2 to 75.2 °F)
On–orbit (Cargo Bay + Deployment)	24 to 44 °C (75.2 to 111.2 °F)
On–orbit (On–Station)	23 to 45 °C (73.4 to 113 °F)
On–orbit (Retrieval + Cargo Bay)	17 to 44 °C (62.6 to 111.2 °F)

TABLE 4.12.1.2.6–I ATMOSPHERIC TEMPERATURES IN THE ISS AND THE MPLM

ISS Atmospheric Temperatures	Value
Descent/Landing	13 to 43 °C (55.4 to 109.4 °F)
Post–Landing	13 to 43 °C (55.4 to 109.4 °F)
Ferry Flight	15.5 to 30 °C (59.9 to 86 °F)

4.12.1.2.7 TRACE CONTAMINANT CONTROL

The purpose of the Trace Contaminant Control System (TCCS) is to control the concentration of unpleasant or potentially hazardous gaseous contaminants within the module atmosphere below the Spacecraft Maximum Allowable Concentrations (SMAC) listed in Table NO TAG. Contaminants are introduced into the spacecraft atmosphere from equipment offgassing, crew metabolic processes, and Extra Vehicular Activities (EVA). These contaminant sources are evaluated based on previous flight data, human metabolic data, and current hardware designs to compile a listing of contaminants and generation rates expected for the module atmosphere.

4.12.2 REFRIGERATED/FROZEN STOWAGE

Refrigerated (+4C) or frozen (–20C) stowage accommodations are provided by the Crew Refrigerator/Freezer on a space available basis. Section 5.18.3 provides information regarding the Crew Refrigerator/Freezer.

4.12.3 LOW TEMPERATURE FROZEN STOWAGE

Low temperature (–80C) frozen stowage accommodations are provided by the Cryo Freezer and the Minus Eighty Degree Laboratory Freezer for ISS (MELFI). Sections NO TAG and NO TAG provides information regarding the Cryo Freezer and MELFI Freezer, respectively.

4.13 SAFETY

ISS payloads must be able to demonstrate compliance with applicable safety requirements during all phases of flight/mission. These requirements can be found in several sources, described in the following paragraphs. These documents establish the payload safety policy and requirements applicable to the Space Shuttle and ISS, including Payload Ground Support Equipment (GSE). These documents are applicable to all new design and existing design (reflown and series) payload hardware, including GSE and ground launch site processing, launch and return, and on-orbit operations.

The Payload Developer/organization completes the hazards analyses of each payload and the presentation of their respective payload safety data to the Payload Safety Review Panel (PRSP). The satisfactory completion of the safety review process by each payload also becomes part of the payload complement safety certification. The timing of the individual payload safety reviews is a function of the payload development schedule and payload hardware maturity.

Safety packages and safety reviews will be performed at several levels: (1) individual payloads, for which the developer will be responsible for creating a safety compliance data package and setting up a review schedule with the PSRP; (2) an Integrated Rack or Facility Review, for which the managing NASA Center or integrating agency is responsible for developing an integrated package and review schedule; and (3) the Integrated Complement package, for which Safety and Mission Assurance (S&MA), with Engineering Integration inputs, is responsible for developing.

Engineering Integration and payload operations analyze the design and operation characteristics of payloads relative to their potential effect on the crew, other payloads, and Station systems. These analyses are to define potential hazards. The results of these analyses are presented to the PSRP and become part of the payload complement safety certification. These integrated payload safety reviews typically begin shortly after IDRD baseline and culminate with safety certification prior to flight.

Payloads which have a direct physical or functional interface with the Space Shuttle carrier and/or ISS elements or carriers must comply with the applicable requirements contained in the following documents:

A. NSTS 1700.7, Safety Policy and Requirements for Payloads Using the Space Transportation System, is the primary source document that establishes the safety policy and requirements applicable for payloads using the Space Transportation System (STS). The requirements in this document are intended to protect flight and ground personnel, the Space Shuttle and other payloads, GSE, and the general public. The document contains technical and system safety requirements applicable to payloads which use the Space Shuttle.

B. NSTS 1700.7 ISS Addendum, Safety Policy and Requirements for Payloads Using the International Space Station, was prepared to expand and modify the existing NSTS 1700.7 requirements for payloads operating on or in the ISS. The addendum was created to relate unique ISS safety requirements to the users in a form that maintains continuity between the Shuttle and ISS programs. The addendum identifies unique, ISS-only requirements as well as indicates which NSTS 1700.7 requirements are applicable to both the Shuttle and ISS payloads. NSTS 1700.7 requirements that are not applicable to payloads during ISS operations are also indicated.

C. NSTS/ISS 18798B, Interpretations of NSTS/ISS Payload Safety Requirements, is a series of letters and memos, based primarily on PSRP experience, designed to provide interpretation and/or additional guidance to payload organizations of existing requirements in NSTS 1700.7.

D. KHB 1700.7, Space Shuttle Payload Ground Safety Handbook, provides the ground handling safety policy and requirements for Space Shuttle (and ISS) payloads and portable GSE design and operations at the launch site. These requirements are applicable to ISS payloads from arrival at the launch site to lift-off, and during postlanding activities. This document establishes the minimum NASA ground processing safety policy, criteria, and requirements for ISS payloads and associated payload organization-provided GSE, including detailed safety requirements for ground operations and payload/GSE design not contained in NSTS 1700.7. KHB 1700.7 does not address facility GSE, non-ISS/STS program elements, or flight safety.

E. NSTS 13830, Payload Safety Review and Data Submittal Requirements for Payloads Using the Space Shuttle International Space Station, defines the safety review process and assists the payload organization in implementing the system safety requirements in Chapter 3 of NSTS 1700.7. It describes the initial contact meeting with the payload organization and defines the subsequent safety reviews necessary to comply with the system safety requirements of NSTS 1700.7 and KHB 1700.7, which are applicable to payload design, flight operations, GSE design, and ground operations. The document also contains detailed instructions on payload safety analyses and safety data submittals which document the results of the analyses. NSTS 13830 has been revised to address ISS requirements and safety process impacts.

F. SSP 57000, Pressurized Payloads Interface Requirements Document, is intended as a single source design requirements document which payloads will comply with in order to certify a pressurized payload for integration into the applicable ISS module(s). The IRD includes the physical, functional, and environmental design requirements associated with payload safety and interface compatibility. The requirements in this document apply to transportation and on-orbit phases of the payload cycle. It also forms the basis for payload-specific ICDs and payload verification requirements.

G. SSP 52005, ISS Payload Flight Equipment Requirements and Guidelines for Safety-Critical Structures, is a compilation of the structural design and verification requirements to be used by the PD to satisfy STS and ISS structural safety criteria. It is designed to provide a single comprehensive set of structural design requirements for PDs to ensure successful compliance with safety requirements.

4.13.1 SAFETY REQUIREMENTS

The safety requirements contained in the documents described in paragraph 4.13 apply to all payloads. When a requirement cannot be met, a noncompliance report must be submitted in accordance with NSTS 13830 for resolution.

If the hazard can not be eliminated within the design, failure tolerance is the basic approach that shall be used to control most payload hazards. The payload must tolerate a minimum number of credible failures and/or operator errors determined by the hazard level. This criterion applies when the loss of a function or the inadvertent occurrence of a function results in a hazardous event:

A. Critical Hazards: Critical hazards are controlled such that no single failure or operator error can result in damage to STS or ISS equipment, a nondisabling personnel injury, or the use of unscheduled safing procedures that affect operations of the orbiter, the ISS, or another payload.

B. Catastrophic Hazards: Catastrophic hazards shall be controlled such that no combination of two failures or operator errors can result in the potential for a disabling of fatal personnel injury or loss of the orbiter/ISS, ground facilities, or STS/ISS equipment.

When failure tolerance cannot be met (for practical or other reasons), hazards must be controlled by “Design to Minimum Risk” criteria. Examples include structures, pressure vessels, pressurized lines and fittings, pyrotechnic devices, mechanisms in critical applications, material

compatibility, flammability, etc. Hazard controls related to these areas are extremely critical and warrant careful attention to the details of verification of compliance on the part of the payload organization and the NSTS/ISS. Minimum supporting data and documentation requirements for these areas of design have been identified in NSTS 13830.

Payloads will also be required to be designed, when possible, to be "Safe Without Services," where they must maintain fault tolerance or safety margins consistent with the hazard potential without ground or flight crew intervention in the event of sudden loss or interruption of ISS-provided services. The payload must remain in a safe state until returned to operation by the ground or flight crew. Monitoring will be continued after service loss when feasible.

4.13.2 BIOMEDICAL INVESTIGATIONS

JSC 20483, Human Research Policy and Procedures, and NIH 85-23, Guide for the Care and Use of Laboratory Animals for Space Flight Investigations, establishes those policies to be implemented by the NASA-JSC Institutional Review Board (IRB) regarding human and biological research protocol. If a payload uses preflight, in-flight, or postflight scientific or medical protocol involving ISS crewmembers, or uses U.S.-provided hardware on any biological subject, the hardware and protocol shall be reviewed and approved by the IRB. The Payload Developer shall prepare and support an integrated hazard assessment of the entire payload and its interfaces for each flight increment or resupply. The flight surgeon in the MCC-H Flight Control Room (FCR) is the real-time authority regarding flight crew in-flight health. Real-time monitoring of biomedical items requiring physician monitoring on the ground, with respect to flight crew health and safety, shall be performed by the MCC FCR surgeon.

The JSC Medical Operations Branch will determine the data monitoring requirements for particular biomedical experiments being performed. For some biomedical experiments (Intense Exercise, Lower Body Negative Pressure, etc.), downlinked electrocardiogram data will be required by the FCR surgeon.

4.13.3 CAUTION AND WARNING

The C&W interface for most payloads will be through the fire detection or smoke sensor interface for those racks that have smoke sensors. However, this does not rule out additional C&W interfaces, such as parameter monitoring. C&W is provided to payloads and systems primarily to give the crew advance or timely warning of a potential emergency that could propagate and pose an unacceptable risk to ISS and/or crew.

The C&W event classifications are defined in paragraph 4.9.1.1.

The C&W panel is a single ORU providing an interface to the ISS crew for visual and aural display of emergency, warning and caution indications from the C&DH system. The C&W panel will be located in various United States Orbital Segment (USOS) and other International Partner modules and nodes. The C&W message (including rack location that generated the condition) can also be displayed on the PCS.

4.13.4 PAYLOAD HAZARD REPORTS

NSTS 13830 provides instructions on completing a Payload Hazard Report (PHR). Although NSTS 13830 recommends use of JSC Form-542B, they do allow other formats as long as the basic elements on JSC Form-542B are included. While this also applies to ISS payloads, it is highly recommended that payloads use the JSC Form-542B format because this is the format the PSRP is most accustomed to seeing and is organized with all the required elements. See Figure 4.13.4–1.

PAYLOAD HAZARD REPORT		NO
PAYLOAD		PHASE
SUBSYSTEM	HAZARD GROUP	DATE
HAZARD TITLE		
APPLICABLE SAFETY REQUIREMENTS		HAZARD CATEGORY
		Catastrophic
		Critical
DESCRIPTION OF HAZARD:		
HAZARD CAUSES:		
HAZARD CONTROLS:		
SAFETY VERIFICATION METHODS		
STATUS OF VERIFICATION		

APPROVAL	PAYLOAD ORGANIZATION	STS
PHASE I		
PHASE II		
PHASE III		

JSC Form 542B (Rev Nov 82) NASA-JSC

FIGURE 4.13.4–1 PAYLOAD HAZARD REPORT

4.13.5 STANDARD HAZARDS

Over the years of flying payloads certain types of hazards have been typical or commonplace for many of the payloads. The controls and verifications of the controls have also become typical. These have been given the name standard hazards and are reported on an abbreviated hazard report form called JSC Form 1230, see Figure 4.13.5–NO TAG. The following paragraphs give brief descriptions of the standard hazards and the methods/requirements that are satisfactory for controlling the hazard.

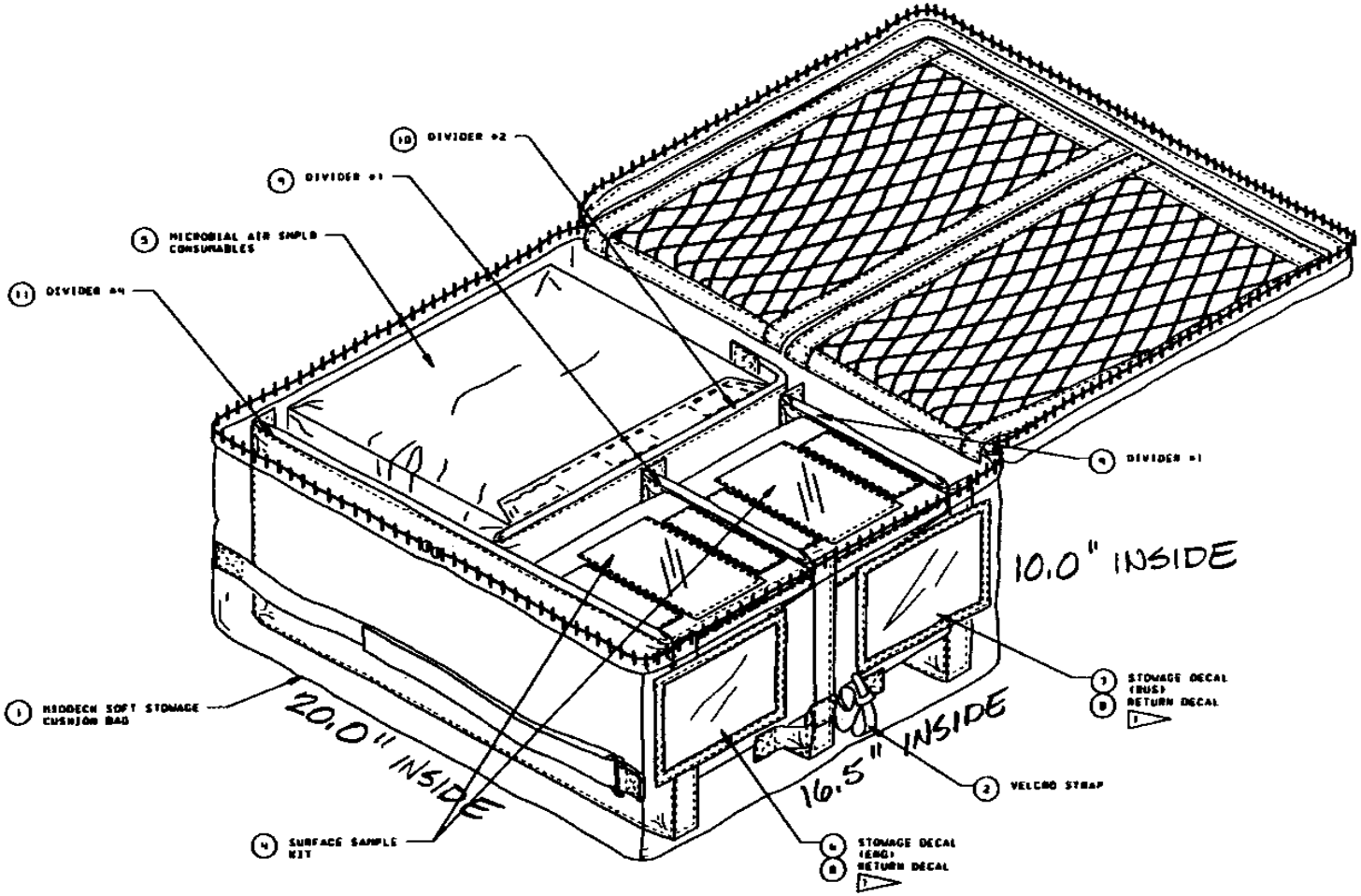

(DESIGN NOT YET FINALIZED) [TBD #16]

FIGURE 4.13.5–1 CARGO TRANSFER BAG

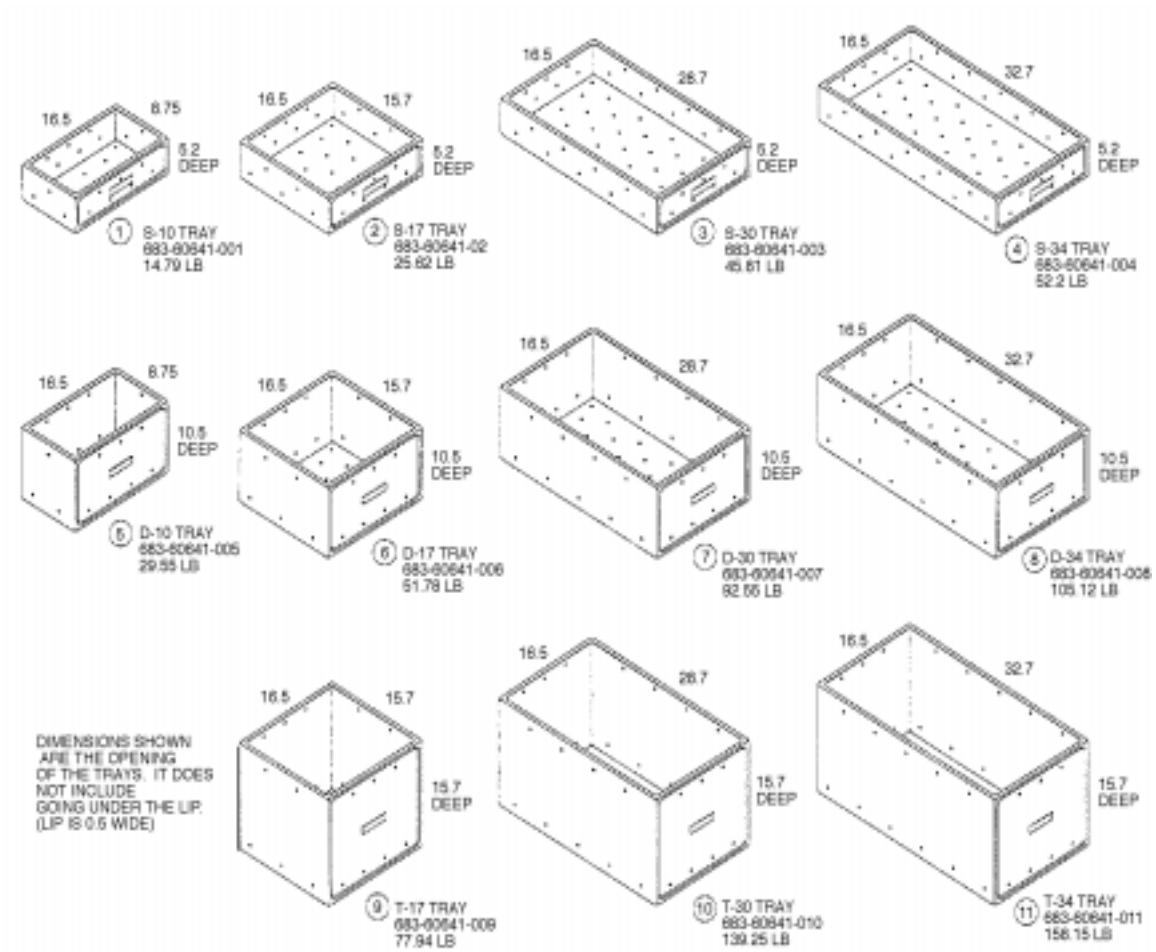

FIGURE 4.13.5–2 ISS STOWAGE TRAYS

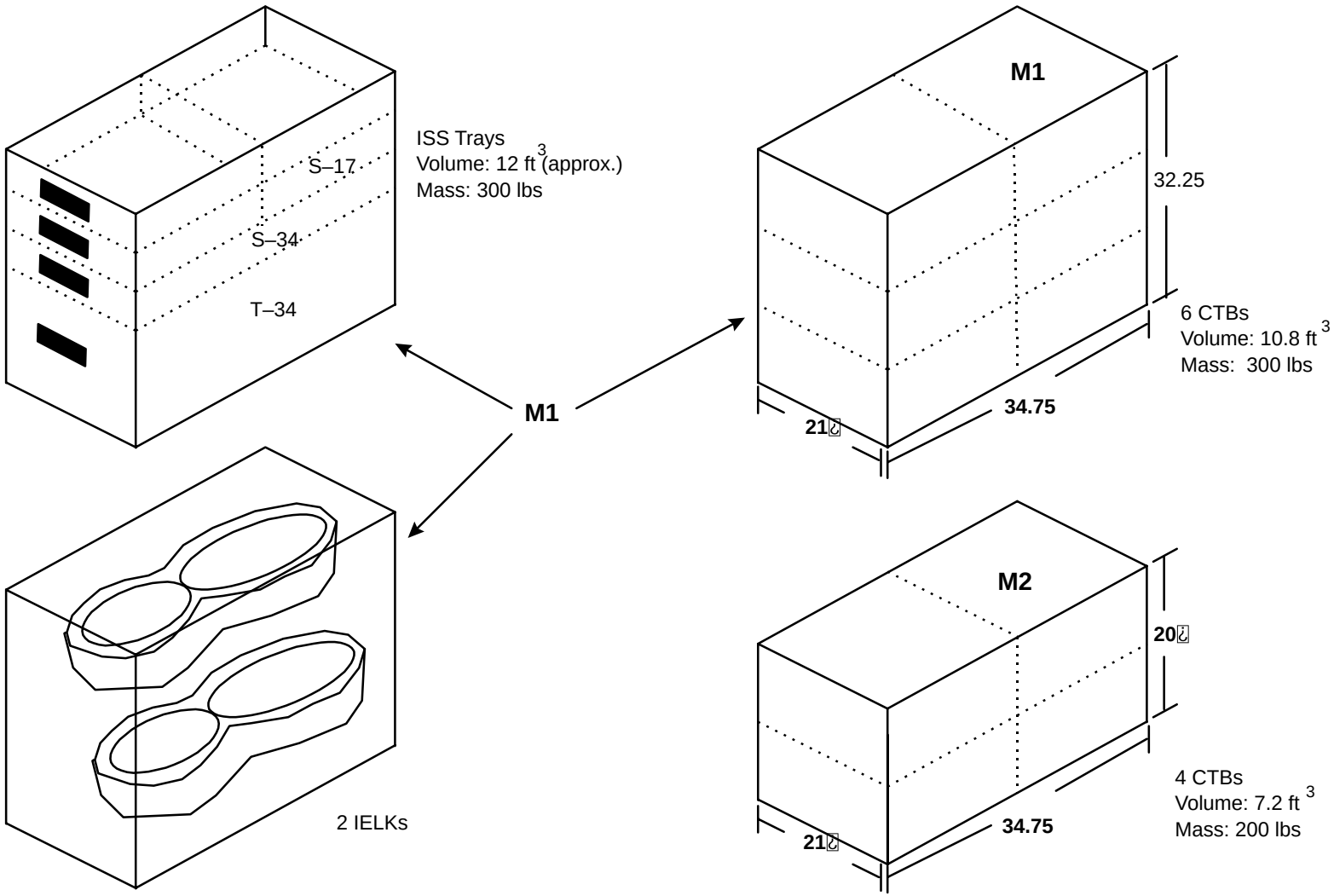

FIGURE 4.13.5–3 M–BAGS

TABLE 4.13.5–I TRANSPORTATION CARRIER CAPABILITIES

	RSR	RSP1	RSP2	ZSR
Sub–Carriers	ISS Stowage Trays	M–Bags CTBs ISS Stowage Trays	M–Bags CTBs ISS Stowage Trays	CTBs ISS Stowage Trays Individual Cargo Items
Design Capacity Mass (lb.) Volume (ft^3)	875 37.5	500 48 – 50	975 48–50	875 47–53
Predicted Volume Capacity With 70% Packing Factor (ft^3)	26.25	34–35	34–35	33–37
Predicted Cargo Density (lbs/ft^3)	25	25	25	25

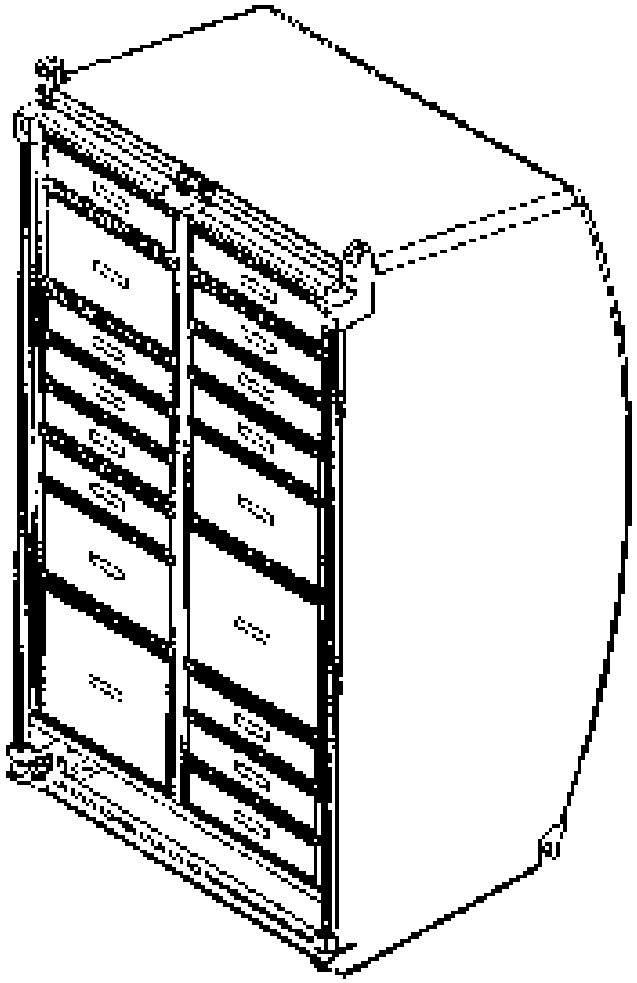

FIGURE 4.13.5–4 RESUPPLY STOWAGE RACK

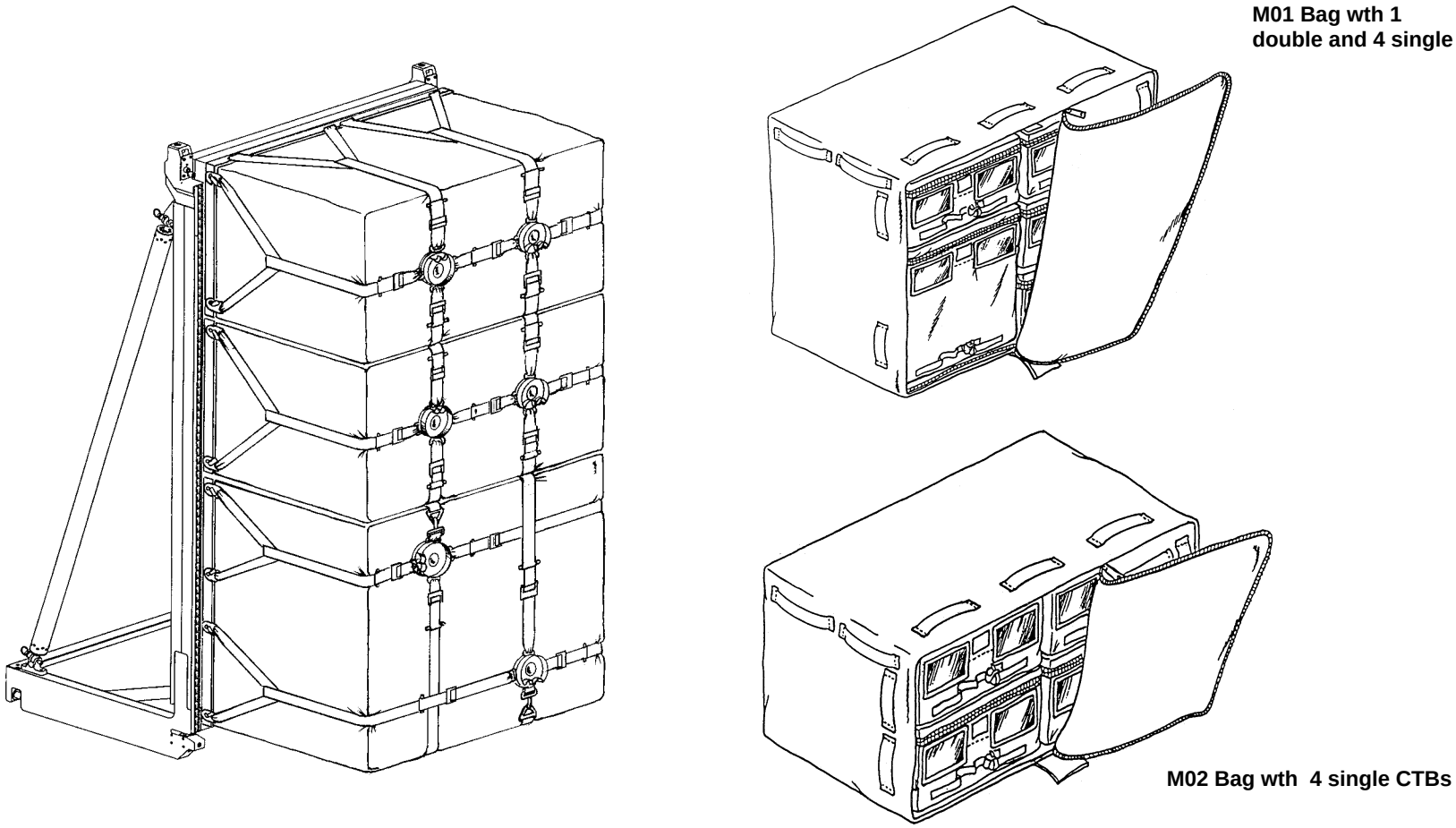

FIGURE 4.13.5–5 RESUPPLY STOWAGE PLATFORM 1

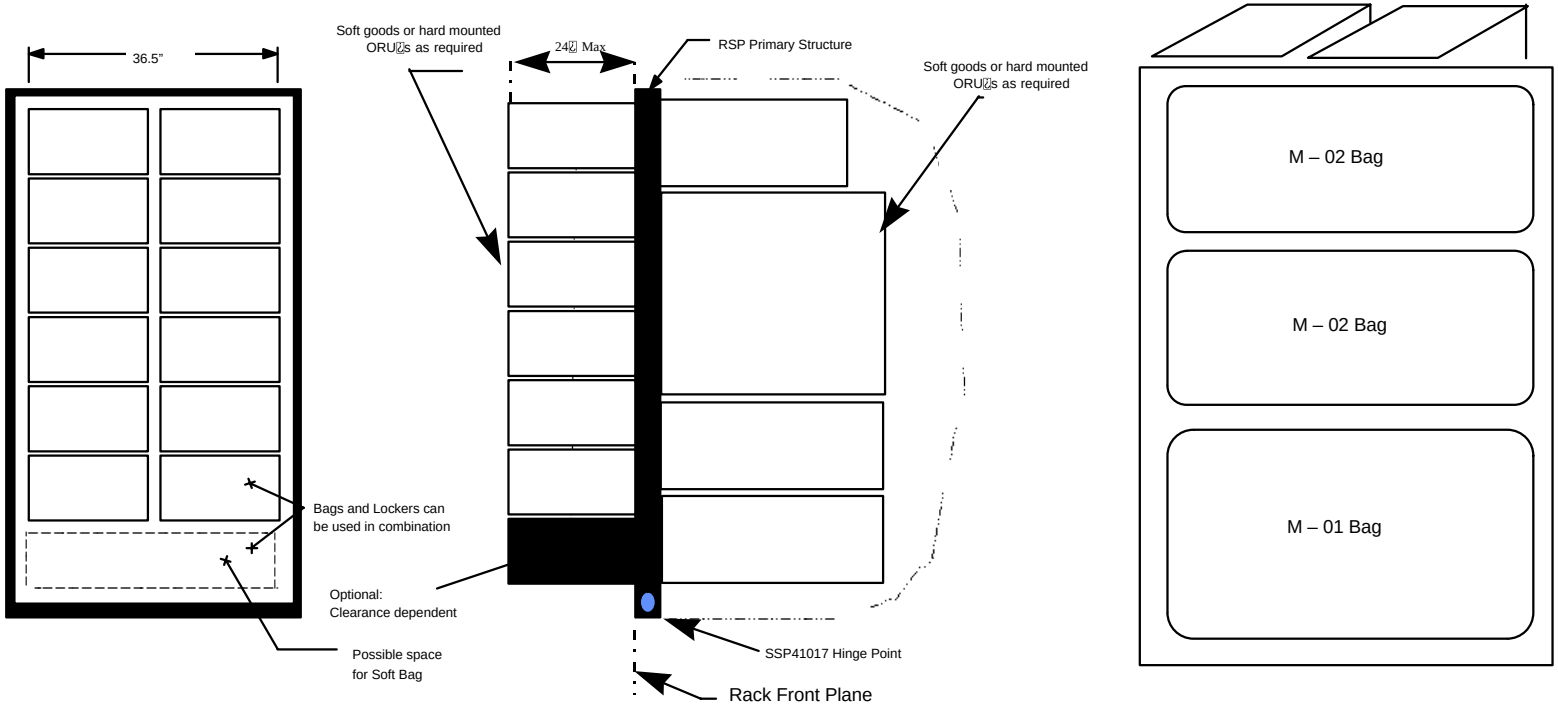

RSP Structure: 300 lbs Max.

Cargo Up Mass: 975 lb (includes unconditioned internal cargo, bags, straps, mounting plates, etc.)
Gross weight: 1275 lbs.

Volume: Approximately 42 Cu. Ft.

RSP Interface Provisions Req’d:
Mounting hole provisions for PMP’s & Bag tie downs
Seat tracks for ASC Bags and handholds/restraints

FIGURE 4.13.5–6 RESUPPLY STOWAGE PLATFORM 2

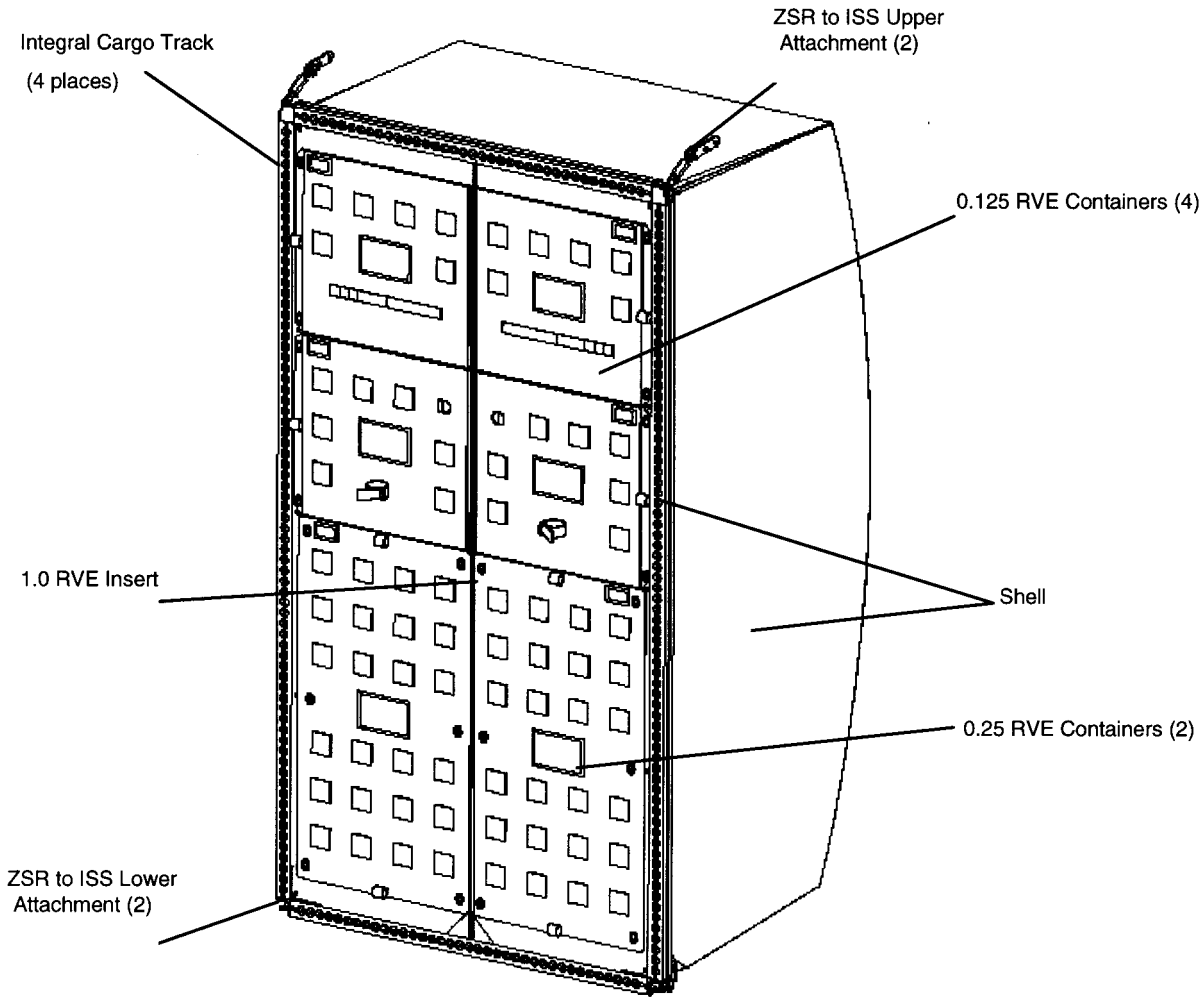

FIGURE 4.13.5–7 ZERO–G STOWAGE RACK

FIGURE 4.13.5–8 FLIGHT STANDARDIZED HAZARD CONTROL REPORT

(PAGE 1 OF 4)

FLIGHT PAYLOAD STANDARDIZED HAZARD CONTROL REPORT		**A. NUMBER** STD –	**B. PHASE**	**C. DATE**
D. PAYLOAD, DTO, DSO or RME *(Include Part Number(s), if applicable)*		**HAZARD TITLE**		**E. VEHICLE**
		STANDARD HAZARDS		
F. DESCRIPTION OF HAZARD:	**G. HAZARD CONTROLS:** *(complies with)*	**H. APP.**	**I. VERIFICATION METHOD, REFERENCE AND STATUS:**	
1. Structural Failure *(payloads must comply with the listed requirements for all phases of flight)*	a) Designed to meet the standard modular locker stowage requirements of NSTS 21000–IDD–MDK or equivalent IDD_____, or b) Stowed in SPACEHAB per MDC91W5023.			
2. Structural Failure of Sealed or Vented Containers	a) Sealed containers must meet the criteria of NASA–STD–5003, contain a substance which is not a catastrophic hazard if released, be made of conventional metals, and have a maximum delta pressure of 1.5 atm. b) For intentionally vented containers, vents are sized to maintain a 1.4 factor of safety for Shuttle or a 1.5 factor of safety for Station with respect to pressure loads.			
3. Sharp Edges	Meets the intent of one or more of the following: a) NASA–STD–3000 / SSP 50005 b) SLP 2104 c) MSFC–STD–512 d) NSTS 07700 Vol. XIV App. 7 (EVA hardware) e) NSTS 07700 Vol. XIV App. 9 (IVA hardware) / SSP 57000			
4. Shatterable Material Release *[limited to contained and non– stressed (no delta pressure) optical glass)*	a) All materials contained and/or b) Non–stressed (no delta pressure) lenses, filters, etc., which pass a vibration test at flight levels and a post–test visual inspection.			

FIGURE 4.13.5–8 FLIGHT PAYLOAD STANDARDIZED HAZARD CONTROL REPORT
(PAGE 2 OF 4)

	A. NUMBER	B. PHASE	C. DATE
5. Flammable Materials	a) A–rated materials selected from MAPTIS, or b) Flammability assessment per NSTS 22648		
6. Materials Offgassing	a) Offgassing tests of assembled article per NHB 8060.1		
7. Nonionizing Radiation 7.1 Non–transmitters	a) Pass NSTS 21288 / SSP 30237 EMI compatibility testing, or b) NSTS/MS2 approved analysis		
7.2 Lasers	a) Beams are totally contained at the maximum possible power and there is no crew access, or b) Meet ANSI Z136.1–1993 for class 1, 2, or 3a Lasers (as measured at the source).		
8. Battery Failure *(use of this form is limited to small commercial batteries as listed below* 8.1 Alkaline–MnO2, Carbon–Zn, or Zn–Air in sizes D or smaller having 6 or fewer cells either all in parallel or all in series (series/parallel combinations require a unique hazard report), no potential charging source, and cells are in a vented compartment. 8.2 Li–CFx, Li–Iodine, Li–MnO2, Ni–Cd, Ni–MH, or Ag–Zn which have a capacity of 200 mAh or less, and no more than 2 cells per common circuit.	Pass acceptance tests which include open circuit & loaded voltage measurements, visual examination, and leakage check under vacuum (e.g. 6 hours at 0.1 psia). *Note: Above acceptance testing for button cells in Section 8.2 which are soldered to a circuit board in commercial equipment (not applicable to those button cells in a spring–loaded clip) is limited to a functional check of the equipment utilizing the subject battery.*		*Note: Application and schematic reviewed and approved by JSC/EP5.*

FIGURE 4.13.5–8 FLIGHT PAYLOAD STANDARDIZED HAZARD CONTROL REPORT (PAGE 3 OF 4)

9. Touch Temperature	a) Meets IVA touch temperature criteria of letter, MA2–95–048. b) Meets EVA touch temperature criteria of NSTS 07700 Vol. XIV App. 7.		
10. Electrical Power Distribution	a) Shuttle payload – Meets all circuit protection requirements of Letter TA–92–038. b) Station payload – Meets station interface circuit protection requirements of SSP 57000 and payload circuit protection requirements of TM102179.		
11. Ignition of Flammable Atmospheres in Payload Bay	All ignition sources are controlled as required in Letter NS2/81–MO82, and MLI grounded per ICD 2–19001.		
12. Rotating Equipment	Rotating equipment meets criteria of NASA–STD–5003 for obvious containment.		
13. Mating/demating power connectors	Meets all requirements of Letter MA3–94–002.		
14. Contingency Return and Rapid Safing	a) Shuttle payload – Meets all rapid safing requirements of Letter MA2–96–190. b) Station payload – Meets rapid safing requirements of Letter MA2–96–190, and design shall not impede emergency IVA egress to the remaining adjacent pressurized volumes.		

APPROVAL	PAYLOAD ORGANIZATION	SSP/ISS
PHASE I		
PHASE II		
PHASE III		

FIGURE 4.13.5–8 FLIGHT PAYLOAD STANDARDIZED HAZARD CONTROL REPORT
(PAGE 4 OF 4)

INSTRUCTIONS FOR REPORT JSC Form 1230, FLIGHT PAYLOAD STANDARDIZED HAZARD REPORT

This form is applicable to all Payloads as well as Developmental test Objectives (DTO's), Detailed Supplementary objectives (DSOs) and Risk Mitigation Experiments (RMEs).
Instructions for the completion of JSC Form 1230, **Flight Payload Standardized Hazard Report**, follow:

1.. **NUMBER**
A unique alphanumeric designation provided by the payload organization or hardware developer that will be used to track this hazard report. These designations will be assigned when the report is first submitted and must be retained for all future updates of the hazard report. The prefix "STD" is used to identify this report as a standardized hazard report.

2.. **PHASE**
Use the pull–down menu to identify the appropriate phase safety review number.

3.. **DATE**
Date that this form was completed or revised.

4.. **PAYLOAD, DTO, DSO or RME *(Include part number(s), if applicable)***
Name of payload or DTO, DSO, or RME *(including number).* When GFE is used, use a separate Form 1230 for each item and include part number. Top assembly groupings may be used if acceptable to the DTO, DSO, RME Coordinator.

5.. **VEHICLE**
Use the pull–down menu to identify the appropriate vehicle.

6.. **DESCRIPTION OF HAZARD**
A hazard is defined as a potential risk situation caused by an unsafe act or condition. The Space Shuttle Payload Safety Review Panel identified the applicable standard hazards which can be documented on this hazard report form.

7.. **HAZARD CONTROLS/VERIFICATION METHODS**
Identified design feature/method used to assure the effectiveness of the hazard control.

8.. **APPLICABLE**
Check the applicable box for each hazard and hazard control consistent with the design of the payload.

9.. **VERIFICATION METHOD, REFERENCE AND STATUS**
This block should summarize the results of the completed tests, analyses, and/or inspections, refer to particular test reports by document number and title, and cross reference unique hazard reports when applicable . The pull–down menu should be used to indicate the status of the activity. Use a continuation sheet if required.

Note: This form must be signed by the payload organization Program Manager before the safety data package is submitted.

4.13.5.1 STRUCTURAL FAILURE

This basically covers those items that are stowed in the standard modular locker per the NSTS 21000–IDD–MDK or stowed in the SPACHAB per MDC91W5023. The payloads used in this manner must comply with the listed requirement for all phases of flight.

4.13.5.2 STRUCTURAL FAILURE OF SEALED OR VENTED CONTAINERS

A sealed container is defined as generally individual components and/or containers (not part of a pressurized system) that are sealed to maintain an internal non–hazardous environment at approximately 1 atm. psia or less. “Approximately 1 atm.” applies to the practice of limited internal pressurization above an external pressure of 1 atm. to assure a positive internal environment. Individual containers of non–hazardous substance up to an internal pressure of 50 psia or up to 100 psia with a minimum ultimate factor of safety of 2.5 on internal pressure may be accepted.

For vented containers, vents are to be sized to maintain a 1.4 factor of safety for shuttle or a 1.5 factor of safety for station with respect to pressure loads.

4.13.5.3 SHARP EDGES

The payload must meet the intent of NASA–STD–3000, Man System Integration Standards, and SSP 50005. This document defines the requirements for radii for edges and corners.

4.13.5.4 SHATTERABLE MATERIAL RELEASE

Glass is the most obvious material in this category; however, other materials have been classified a shatterable depending upon their properties. Glass considered in this category is optical glass (lenses, filters, optical light bulbs, etc.) with no delta pressure loading condition. The control for this hazard is to either have materials entirely contained or for optically mounted glass pass a vibration test to flight levels and pass a post test visual inspection showing no flaws.

4.13.5.5 FLAMMABLE MATERIALS

If the payload uses materials chosen from the MAPTIS materials data base with an A rating or can have a favorable flammability assessment per NSTS 22648, Flammability Configuration Analysis for Spacecraft Applications, then the standard category can be claimed. Should the materials not meet one of the aforementioned criteria then a hazard report will be required.

4.13.5.6 MATERIALS OFFGASSING

This applies to all non metallic materials or polymers. Since most of these materials give off vapors at temperature, which may have deleterious effects on humans, an offgassing test of the

assembled article per NHB 8060.1, Flammability, Odor, and Offgassing Requirements and Test Procedures for Materials in Environments that Support Combustion, is to be performed.

4.13.5.7 NONIONIZING RADIATION

Non–transmitters must either pass EMI compatibility testing as specified in NSTS 21288, Required Data/Guidelines for Payload/Shuttle Electromagnetic Compatibility Analysis, SSP 30237, Space Station Electromagnetic Emission and Susceptibility, or have been granted approval by JSC Integration Engineering Office. For lasers the beams are to be totally contained at the maximum possible power and there is no crew accessibility, or meet ANSI Z136.1–1993, American National Standard for Safe Use of Lasers, for class 1, 2, or 3a lasers as measured at the source.

4.13.5.8 BATTERY FAILURE

The safety policy regarding the design conditions and acceptance tests required when “small commonly used batteries” are used in space applications is as follows. Meeting the design conditions and acceptance test criteria exempts the payload organization from submitting a detailed hazard report as well as incorporating special design features such as fuses, thermostats, and electrolyte absorbent material for these batteries. Upon meeting the design conditions below, readily replaceable flight batteries must undergo a preflight Acceptance Test. The Acceptance Test shall include an open circuit voltage measurement, cell loaded voltage test, dimensional check, and inspection for leakage before and after an exposure to vacuum, e.g., six hours at 0.1 psia. The batteries identified as “small commonly used batteries” are of two types.

The first type are button cells of 200 milliamp hours or less. Only button cell batteries made from lithium–carbon monofluoride, lithium–iodine, lithium–manganese dioxide, nickel–cadmium, nickel–metal hydride, silver–zinc, and zinc–air qualify for inclusion, dependent on capacity and design conditions. These batteries are typically used for memory back–up and appear to be widely used in payload hardware, especially in commercial off–the–shelf components. Button cell batteries soldered into commercial hardware and meeting the design condition requirements may be accepted with a visual inspection of battery condition and a hardware functional test. The specific design condition requirements for button cells are that they include no more than three per circuit with no series–parallel combinations, they are not enclosed in a sealed compartment, and they have no potential for hazardous charging.

The second type batteries are the alkaline–manganese, carbon–zinc, and zinc–air batteries of sizes D or smaller. The specific design condition requirements for this type are that they include no more than six per circuit with no series–parallel combinations, they are not enclosed in a sealed compartment, and they have no potential for hazardous charging from other circuits or designed–in charging circuits.

Assurance of adequate shelf life for the mission should be considered for mission success and evaluated for the payload application. Prolonged storage may cause cell deterioration which is not readily evident, but may have safety implications. This shall be addressed in the Safety Data Package.

4.13.5.9 TOUCH TEMPERATURE

The abbreviated hazard report form 1230, known as the standard form may be used when the payload design meets Intra–Vehicular Activity (IVA) touch temperature criteria as specified in interpretation letter MA–95–048. This letter defines the temperature range for both incidental and intentional bare skin contact with metallic surfaces as –18°C to +49°C (0 to 120°F). The upper limit of 49°C may be extended if the surface is nonmetallic. Reference is made to the interpretation letter for additional information on the proper controls.

For EVA touch temperatures the values are given in NSTS 07700 Vol. XIV APP.7 as the gloves are designed to withstand contact temperatures of 235°F to –180°F with a contact pressure of 1.0 psi without discomfort to the hand for a long as 0.5 minute. Thermal mittens are provided to extend the contact temperature (up to 350°F) and/or the exposure time if necessary, but these are extremely restrictive to the crewmember's hand dexterity and should not be baselined for use.

4.13.5.10 ELECTRICAL POWER DISTRIBUTION

For shuttle payloads, the payload meets all circuit protection requirements of interpretation letter TA–92–038. For station payloads the interface circuit protection meets the protection requirements of SSP 57000 and circuit protection requirements of TM 102179, Selection of Wires and Circuit Protective Devices for STS Orbiter Vehicle Payload Electrical Circuits. All of these references specify proper wire sizing, i.e., wire derating and circuit protection devices which are acceptable to meet safety requirements.

4.13.5.11 IGNITION OF FLAMMABLE ATMOSPHERES IN PAYLOAD BAY

This hazard is identified for reentry, landing and postlanding operations of the orbiter. Normal payload functions shall not cause ignition of a flammable payload bay atmosphere that may result from leakage or ingestion of fluids into the payload bay. Generally the control is preventing or controlling ignition sources. Ignition sources are divided into two categories, hot surfaces and electrical discharge. Generally payloads are powered down during launch and landing which removes ignition sources. MLI insulation must provide proper bonding and grounding to preclude any static discharge effects. Should the payload be powered during ascent and, or descent phases, refer to interpretation letter NS2/81–MO82 for additional information.

4.13.5.12 ROTATING EQUIPMENT

Rotating equipment is to meet the criteria of NASA–STD–5003 which states "Engineering judgment supported by documented technical rationale may be used when it is obvious that an enclosure, a barrier, or a restraint exists that prevents the part from escaping into the space shuttle payload bay. Examples of such enclosures that have obvious containment capability include metallic boxes containing closely packed electronics, detectors, cameras, and electric motors: pumps and gearboxes having conventional housings: and shrouded or enclosed fans not exceeding 8 inches (200mm) diameter and 8,000 revolutions per minute (rpm) speed".

4.13.5.13 MATING/DEMATING POWER CONNECTORS

Payloads must comply with the requirements for mating/demating of powered connectors specified in NSTS 18798, MA2-97-093. Connector interfaces categorized as high-power connectors must meet the requirements listed below. (Low-power connector interfaces are those that limit the short circuit outputs to less than 16 watts or have an open-circuit output voltage of no greater than 32 V.) The design features described below are required for all connectors/circuits that may require mating/demating and do not meet the low power criteria.

A. The powered side of the connector shall be terminated in sockets rather than pins.

B. The powered circuit shall have at least one verifiable upstream inhibit which removes voltage from the connector. The design shall provide for verification of the inhibit status at the time the inhibit is inserted. This requirement is met in the USL by the RPCs located in SPDAs C and D which may be controlled by the Power Maintenance Switch (PMS) (via an MDM) in the payload rack. Details of the PMS are contained in paragraph 4.3.6.3.

For IVA, when payloads have internal voltages greater than 32 volts, the following design features are also required:

C. The powered side (upstream) connector shall have a grounded back–shell.

D. When mating/demating recessed connectors (e.g., connectors attached to equipment that will be remote from the crew such as back–of–the–rack when the connectors are mated), a design feature for grounding of the case shall be maintained while mating/demating the pin/sockets.

E. Payloads that are reconfigured such that their fault bond is disturbed during mate/demate operations, will require either redundant fault bonds to grounded structure or a post installation test to verify a good fault bond has been established prior to payload power activation.

4.13.5.14 CONTINGENCY RETURN AND RAPID SAFING

For shuttle payloads, the design shall meet the rapid safing requirements of interpretation letter MA2–96–190. For station payloads the design must meet the rapid safing requirements of letter MA2–96–190 and the design shall not impede emergency IVA egress to the remaining adjacent pressurized volumes.

This ends the discussion on the so called standard hazards as reported on JSC Form 1230.

4.13.5.15 NON–STANDARD HAZARDS

The preceding paragraphs defined the process of standard hazards. Standard hazards have “well known” controls and verifications and have been historically used by payloads in the past. Any of the aforementioned standard hazards may be required to develop a hazard report using the JSC Form 542 should the payload not meet the requirements as stated on the JSC Form 1230

"Flight Control Standardized Hazard Control Report". Typical hazards identified to use the Form 542 are: Structural Failure, Release of Toxic Materials, Ionizing Radiation, Electrical Shock, Crew Exposure to Laser Emissions, Exposure to Excessive EMI Emissions, Rupture and or Explosion of Pressure Systems, Leakage/Rupture of Sealed Containers, Failure of Rotating Equipment, Safety Critical Mechanisms, Pyrotechnic Devices, and others.

It is the responsibility of the payload organization to identify all hazards, their causes, provide means to control the hazard and to be able to show means of verifying that the controls do in fact control the potential hazard. The payload organization is required to meet the safety requirements as defined in NSTS 1700.7 ISS Addendum, its interpretation letters of NSTS 18789 and the Payload Safety Review and Data Submittal Requirements of NSTS 13830. Particular attention is drawn to the definitions of fault tolerance and design to minimum risk of 1700.7 and the required data submittals of NSTS 13830.

4.14 EXPEDITE THE PROCESSING OF EXPERIMENTS TO SPACE STATION (EXPRESS) RACK

The EXPRESS Rack, intended to permit quick and simple integration of payloads into the ISS, is an International Standard Payload Rack (ISPR) equipped with structural support hardware, power conversion and distribution equipment, data and video equipment, nitrogen and waste gas vent distribution hardware and thermal support equipment. The EXPRESS Rack will accommodate eight Middeck Locker (MDL) type experiments and two four–Panel Unit (PU) International Subrack Interface Standard (ISIS) Drawer type experiments. An illustration of the EXPRESS Rack is provided in Figure 4.14–1. The EXPRESS Rack includes connector panels that provide interfaces to the experiments for the services and resources provided by the EXPRESS Rack. These resources include power, telemetry/commands, video, water cooling, gaseous nitrogen, and vacuum exhaust. Further details of the EXPRESS Rack experiment accommodations can be found in SSP 52000–PAH–ERP, Expedite the Processing of Experiments to Space Station (EXPRESS) Rack Payloads Accommodation Handbook.

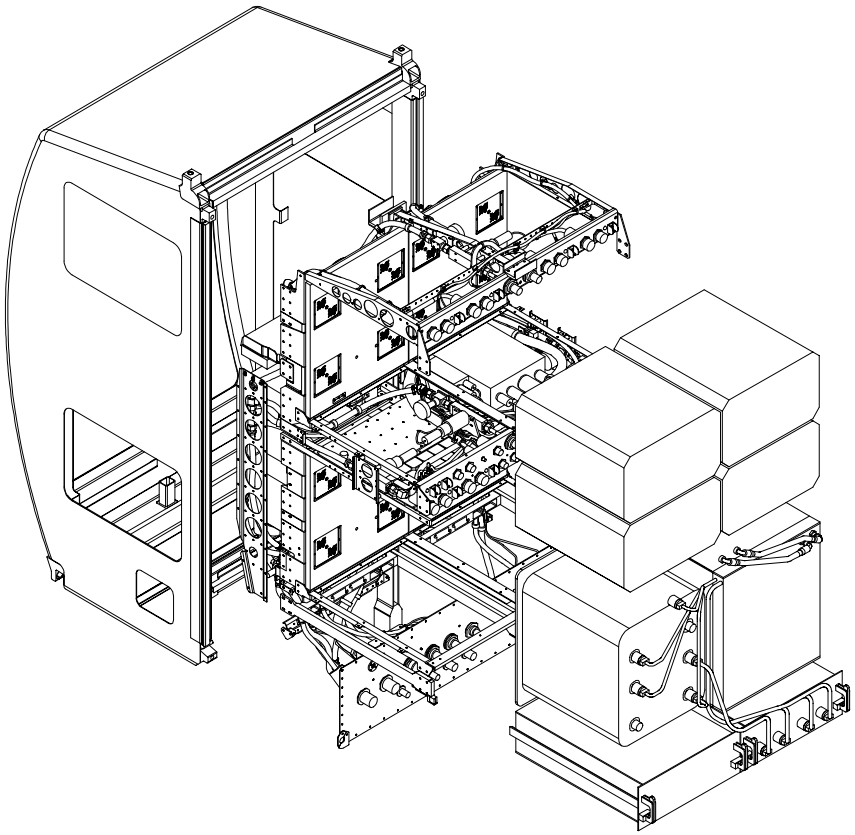

NON ARIS

FIGURE 4.14–1 EXPRESS RACK

5.0 LAB SUPPORT EQUIPMENT

The Lab Support Equipment (LSE) is the general purpose equipment and tool items developed to support ISS maintenance and payload operations. Individual LSE items can be located and operated in any ISPR location with the proper utility interfaces. Some items are pre–integrated into racks while other smaller items can be stowed in a payload rack. Availability of Specific LSE on orbit varies by increment as a function of user requirements. The LSE items and the flight that will be available are specified in Table 5.0–I, Lab Support Equipment.

TABLE 5.0–I LAB SUPPORT EQUIPMENT

Description	Flight Available
Bar Code Reader	UF–1
Battery Charger	UF–1
ISS General Purpose Video Camera	**[TBD #20]**
Film Still Cameras	7A.1
Digital Still Camera	7A.1
Refrigerated Centrifuge	Post AC
Cleaning Equipment	6A
DC Power Supply	UF–1
Digital Recording Oscilloscope, Digital Multimeter, pH Meter, and Digital Thermometer (Combined)	7A.1
Digital Thermometer	UF–1
Function/Sweep Generator	UF–1
General Purpose IVA Tools	2A
Incubator	UF–3
Maintenance Work Area	7A.1
Micro Mass Measurement Device	UF–5
Small Mass Measurement Device	UF–5
Compound Microscope	UF–3
Dissecting Microscope	UF–3
Passive Dosimeter	7A.1
Portable Utility Light	**[TBD #20]**
Quick/Snap Freezer	UF–7
Cryo Storage Freezer	UF–7
Minus Eighty–degree Laboratory Freezer (MELFI)	UF–2
Crew Refrigerated Freezer	UF–1
Restraints and Mobility Aids	UF–1
Utility Outlet Panel	**[TBD #20]**

5.1 BAR CODE READER

A pocket size battery powered hand–held unit which is able to store and transfer data electronically (via disk, card) to the PCS.

5.2 BATTERY CHARGER

The battery charger simultaneously recharges single cell NiCad batteries of the following sizes and quantities: AAA (three), AA (eight), C (eight), D (six), 9–volt (four) and one battery pack of a maximum size of 16.5” (421 mm) x 6.75” (171 mm) x 5.12” (130 mm). The packs must incorporate a thermal sensor to connect the positive line to the sense line when the temperature is approaching a safe limit. The battery charger uses this condition to stop charging the battery. The battery charger is able to charge the battery until preset voltage or a preset charge is reached. The battery charger is controlled by the portable computer system and the charging parameters reside in the battery data base. The available functions include fast charge, slow charge, discharge, and recondition.

5.3 CAMERAS

The camera complement on board the ISS includes video, still film, and still digital cameras. Accessories such as lens sets, filters, and flash attachments are also provided.

5.3.1 ISS GENERAL PURPOSE VIDEO CAMERA

The General Purpose Video Camera is a Camcorder for capturing video from payloads, storing the video on tape and for down–linking to ground. The camera utilizes a standard **[TBD #16]** type tape cassette.

5.3.2 FILM STILL CAMERAS

The film still cameras are a set of dedicated cameras to support payload operations. The set consists of one 35mm Commercial–off–the–Shelf (COTS) Nikon F–5 and one 70mm COTS Hassel Blad camera.

5.3.3 DIGITAL STILL CAMERA

The still digital camera consists of a COTS Kodak DCS460 camera.

5.4 REFRIGERATED CENTRIFUGE

The Refrigerated Centrifuge is a device which uses centrifugal acceleration to separate materials by density in a temperature controlled environment.

5.5 CLEANING EQUIPMENT

The cleaning equipment consists of tools and supplies necessary to perform housekeeping and cleanup of laboratory equipment, including the interior surfaces of gloveboxes. These items are experiment unique, but will be purchased from an approved (tested/verified/authorized) list.

5.6 DC POWER SUPPLY

The dc power supply provides 0 to 120 Vdc at 0 to 7 amps of current. The dc power supply displays the current and voltage supplied to a system, has thermal shutdown capability**,** standard analog control and standard over–voltage protection.

5.7 DIGITAL RECORDING OSCILLOSCOPE, DIGITAL MULTIMETER, PH METER, AND DIGITAL THERMOMETER (COMBINED)

(TBD #16)

5.8 DIGITAL THERMOMETER

The digital thermometer is a portable, general–purpose unit consisting of a hand–held, rechargeable battery powered electronics package with control and display functions, and a set of thermocouple/thermistor probes. The unit provides for the simultaneous connection of two probes and the ability to readily switch read–out between probes. This unit is for general temperature measurement over the range of –200 to +1250 °C (–328 to 2282 °F), with measured temperature displayed in either Celsius or Fahrenheit.

5.9 FUNCTION/SWEEP GENERATOR

The function/sweep generator provides a multi–interval sweep, AM/FM/PWM modes, 4–digit amplitude resolution, 11–digit frequency resolution, and is IEEE–488 programmable. The function/sweep generator has a Bayonet Network Connector (BNC) interface and performs within the following parameters:

Function	Sine	Square	Triangle/Ramp	Pulse	DC
Amplitude (min–max)	1.0 milivolt to 10 volts	1.0 milivolt to 10 volts	1.0 milivolt to 10 volts	Greater than 40 volts	0 V to +5 V
Frequency (min–max)	1 microHz to 21 MHz	1 microHz to 21 MHz	1 microHz to 21 MHz	N/A	N/A

5.10 GENERAL PURPOSE IVA TOOLS

Supports the ISS function of providing the approved on–orbit Organizational and Intermediate maintenance equipment, tools, spares and material as required to sustain the on–orbit systems. Hand tools comprising the standard tool list are tools to be used for ORU removal and replacement. The IVA tools list can be found on the Maintenance and Resupply Team Homepage on the World Wide Web at the following address:

http://iss–www.jsc.nasa.gov/ss/issapt/opsip/mresup/mresur_home.htmp

5.11 INCUBATOR

The Incubator is a controlled environmental chamber for growing cell and tissue cultures. This 8 Payload Unit tall incubator, operates within the Habitat Holding Racks, Life Science Glovebox, and Centrifuge. It has a 18.7 liter capacity with a temperature range of 4 °C to 38 °C (39 °F to 100 °F).

5.12 MAINTENANCE WORK AREA

The maintenance work area, Figure 5.12–1, provides an on–orbit maintenance and repair work site which includes a work surface, glovebox, generic tools, and supplies for maintenance and utilizes existing foot restraints or provides special restraints as required. The maintenance work area is portable, attaches to and interfaces with seat tracks common throughout the station. It is collapsible to reduce aisle interference when not in use and can be stowed for launch. It has provisions for capture and disposal of particles and limited fumes generated during use, providing a general clean environment which is easily maintained. Internal access to the work volume of the containment system is achieved using glove ports that can accommodate small, medium, and large size gloves. The maintenance work area accommodates up to two gloved crew members working simultaneously.

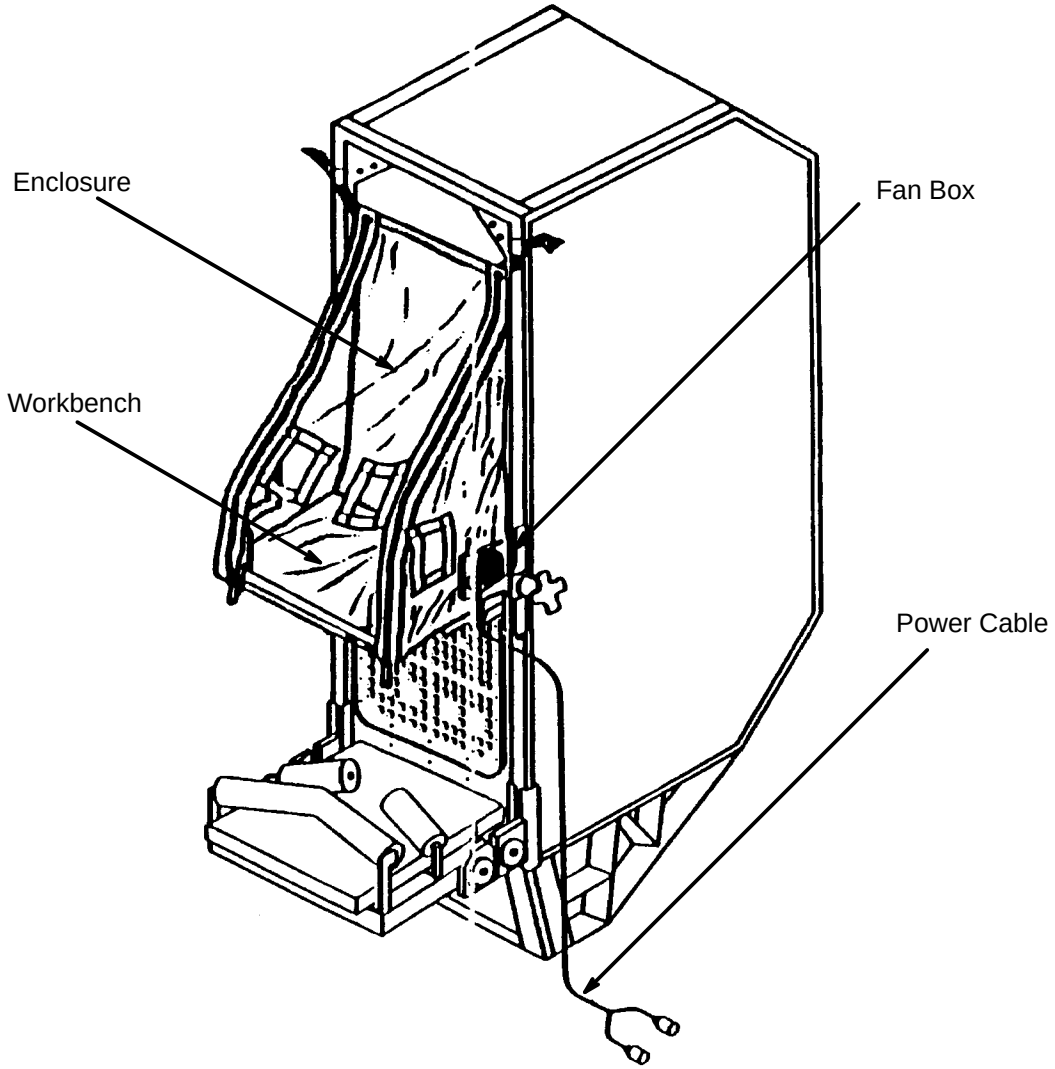

FIGURE 5.12–1 MAINTENANCE WORK AREA

5.13 MASS MEASUREMENT DEVICES

Two different instruments are available to measure mass in the range of 1 mg to 5000 gm.

5.13.1 MICRO MASS MEASUREMENT DEVICE

5.13.2 SMALL MASS MEASUREMENT DEVICE

The Micro Mass Measuring Device is an instrument that can accurately determine the mass of solid chemicals, liquids, tissue sample, organs, etc. in the range of 1 mg to 10 gm.

The Small Mass Measuring Device, Figure 5.13.2–1 is a microgravity instrument that can accurately determine the masses of solid, semi–solid, and liquid materials (including live specimens), in the range of 1 to 5000 grams.

5.14 MICROSCOPES

Both compound and dissecting microscopes are available to support microscopy studies.

5.14.1 COMPOUND MICROSCOPE

The Compound Microscope is a standard bench top microscope with objective magnifications up to 1000X and Kolher illumination to support phase contrast microscopy for cellular and sub–cellular observations. The microscrope can utilize Halogen, Hg, or Xe light sources.

5.14.2 DISSECTING MICROSCOPE

The Dissecting Microscope is a system which provides the capability for microscope aided inspections and manipulation of specimens within the confines of a glovebox. It utilizes long working distance optics to allow for operations such as specimen dissection. It has a magnification range of 4–120X and uses a Halogen light source.

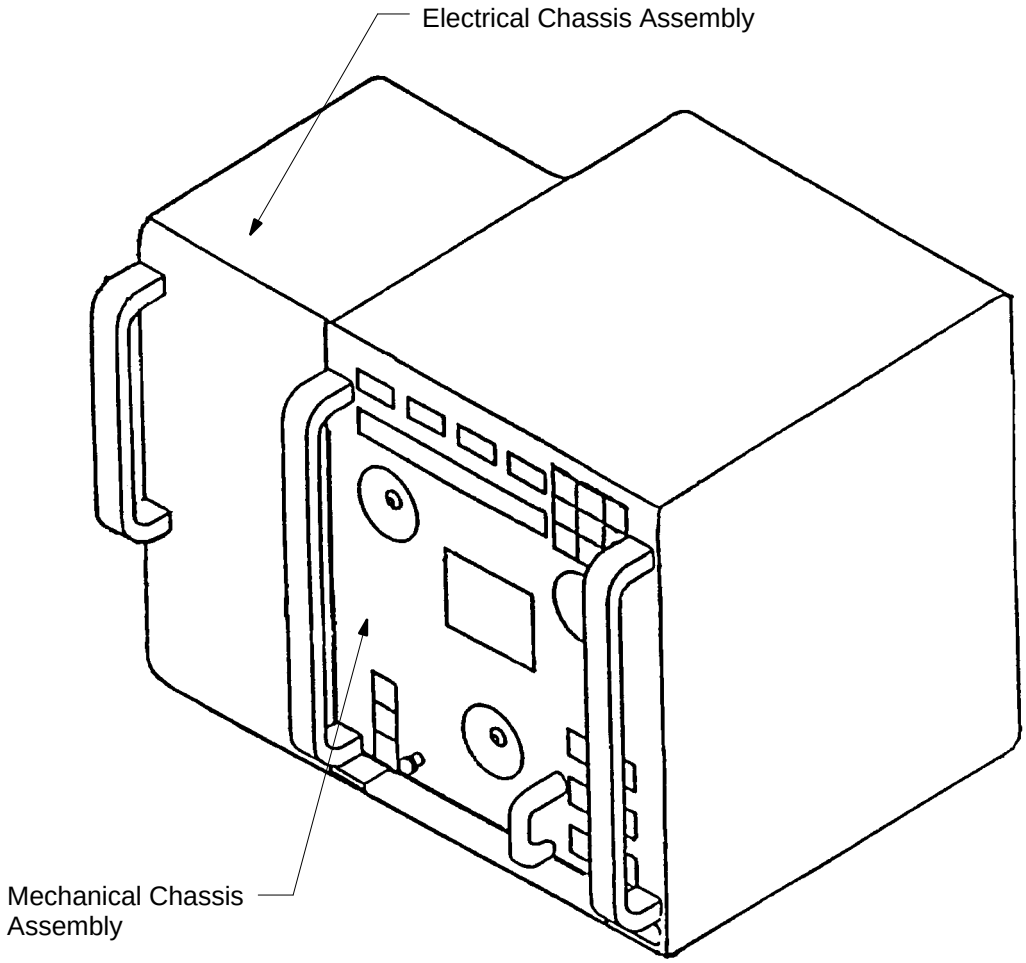

FIGURE 5.13.2–1 SMALL MASS MEASUREMENT DEVICE

5.15 PASSIVE DOSIMETER

The Passive Dosimeter, Figure 5.15–1, consists of a Thin Layer Dosimetry (TLD) type badge, Plastic Nuclear Track Detectors (PNTD), memory cards, and a reader/annealer to determine badge exposure to radiation. The TLDs are used for gamma radiation, electrons, protons, and nuclei with charge greater than 1. The PNTD are consumable and are sensitive to alpha particles and low energy protons.

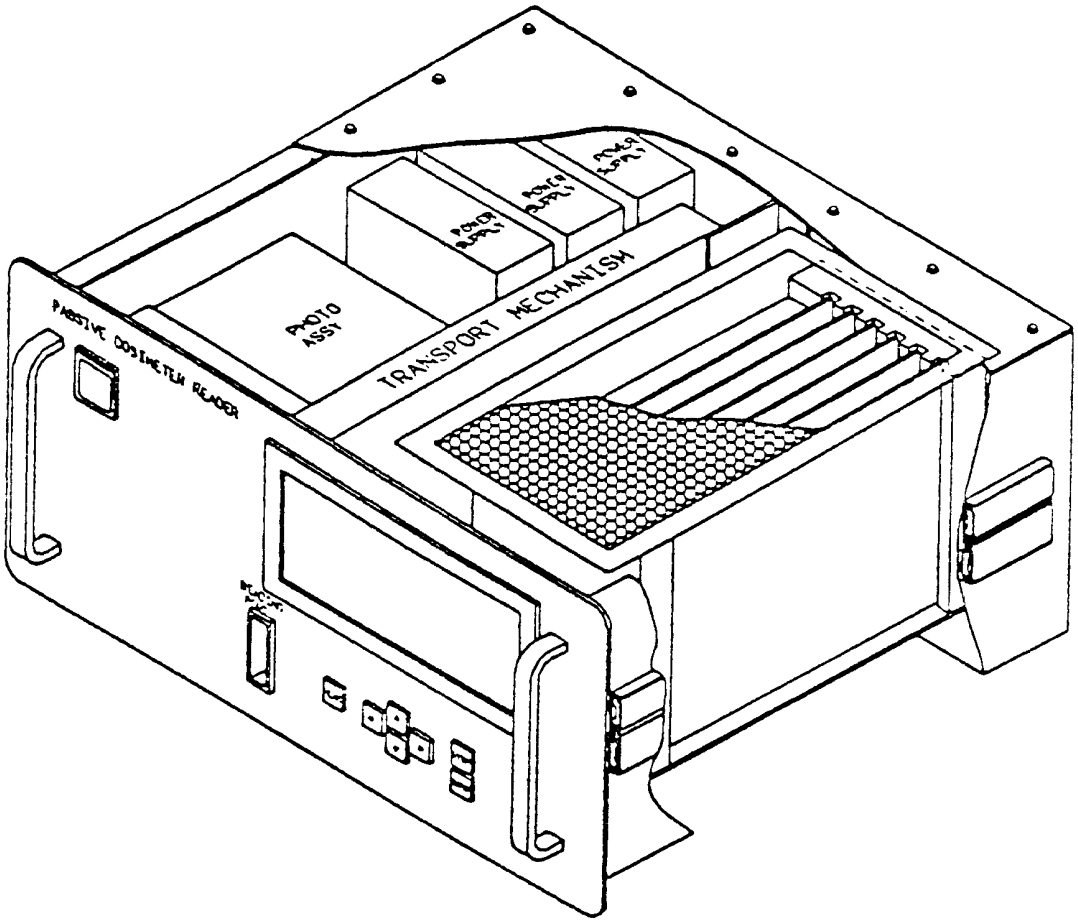

FIGURE 5.15–1 PASSIVE DOSIMETER READER/ANNEALER

5.16 PORTABLE UTILITY LIGHT

The Portable Utility Light provides 25 ft–candles of white light at a distance of 2.25 feet and a beam spread of 60 degrees.

5.17 REFRIGERATOR/FREEZER EQUIPMENT

The ISS provides several different facilities that are available for refrigeration and/or cryogenic storage of experiment specimens.

5.17.1 CRYO

The cryogenic lab support equipment consists of the Quick/Snap Freezer and the Cryo Storage Freezer. Small specimens are initially frozen using the Quick/Snap Freezer and then transferred to and stored in the Cryo Storage Freezer.

5.17.1.1 QUICK/SNAP FREEZER

The quick/snap cryogenic freezer, Figure 5.17.1.1–1, is a portable –196 °C freezer capable of vitrifying small tissue samples and quick freezing medium sized contained samples while being operated in the Life Science Glovebox. The quick/snap cryogenic freezer will typically lower the temperature of a 2–mL specimen from room temperature to –196 °C in 10 minutes or less (depending on the geometry and composition of the specimen).

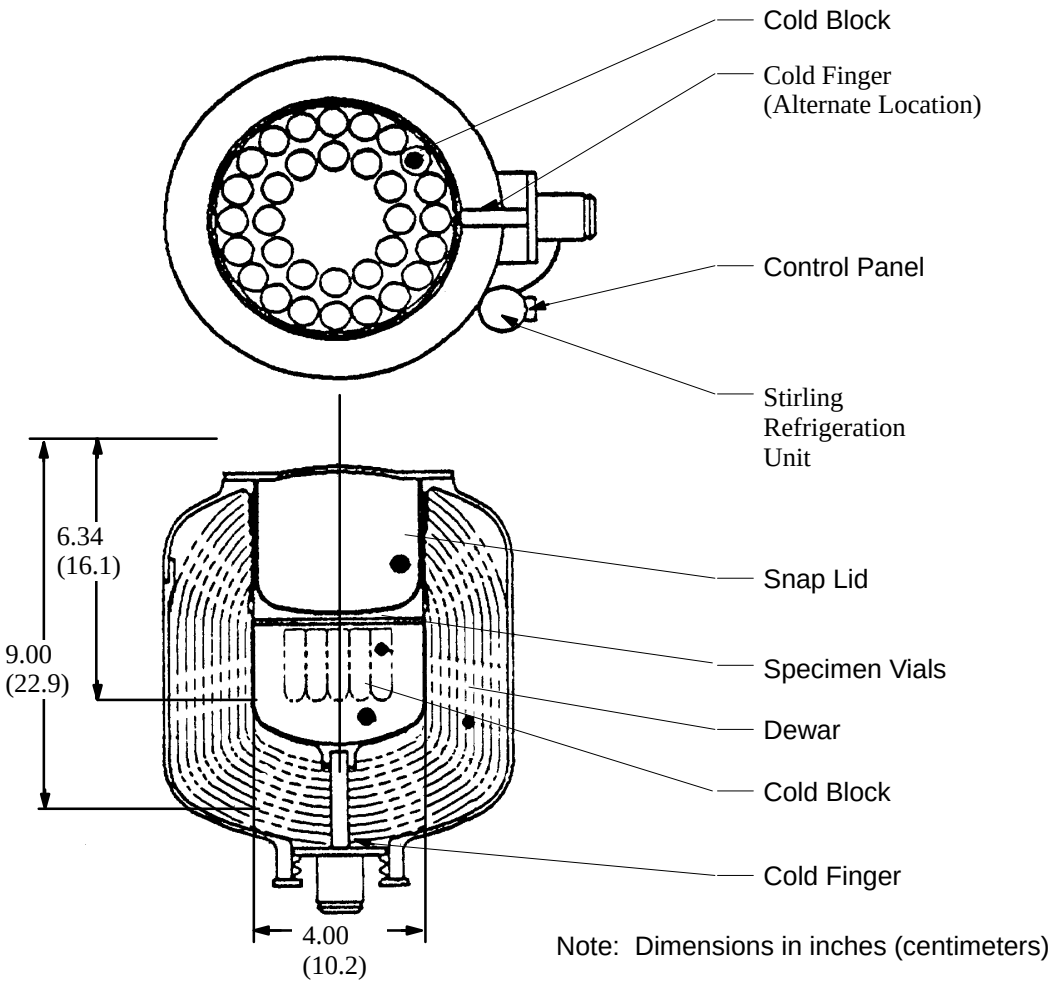

FIGURE 5.17.1.1–1 QUICK/SNAP CRYOGENIC FREEZER

5.17.1.2 CRYO STORAGE FREEZER

The cryogenic storage freezer, Figure 5.17.1.2–1, provides a –183 °C steady–state temperature storage for perishable specimens, such as tissue samples, protein crystals, etc. The internal volume of the cryogenic storage freezer will accommodate 20 two–mL or 10 five–mL vials.

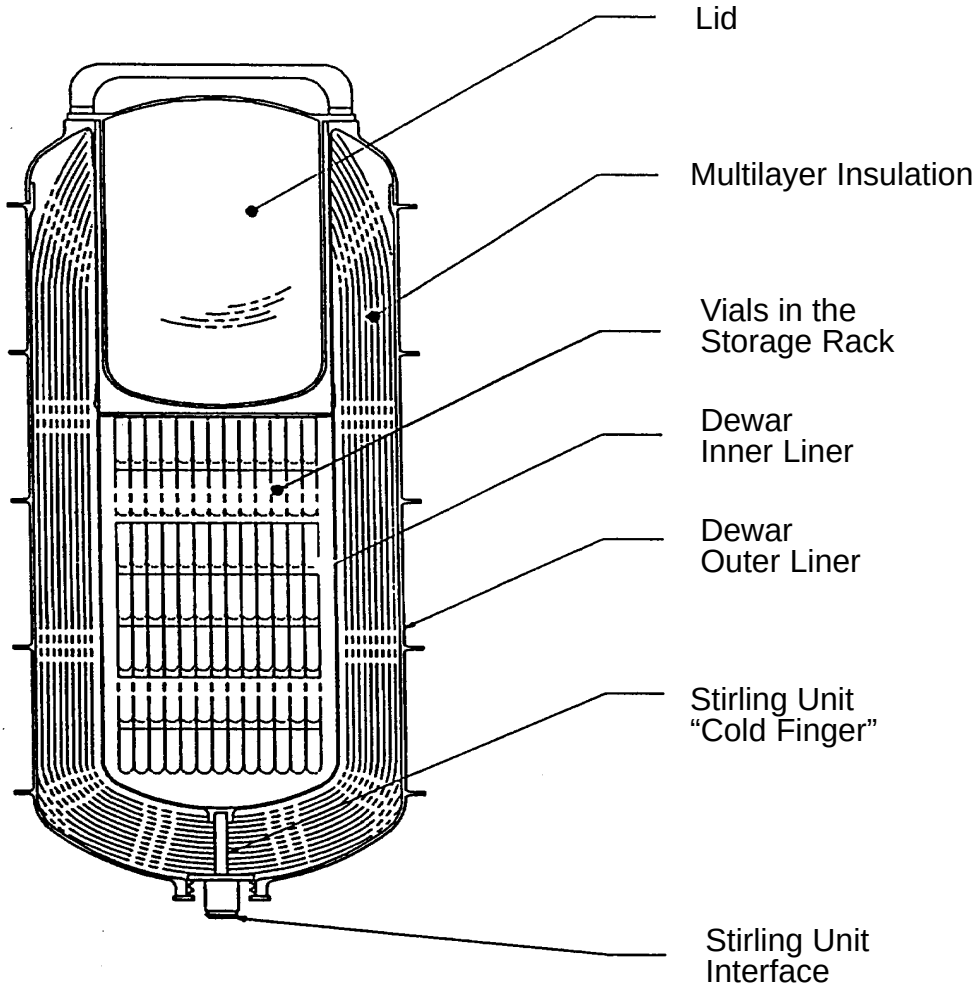

FIGURE 5.17.1.2–1 CRYOGENIC STORAGE FREEZER

5.17.2 MINUS EIGHTY–DEGREE LABORATORY FREEZER (MELFI)

The MELFI, Figure 5.17.2–1, will provide low temperature cooling and storage of reagents, biological samples, and perishable items at –80 °C, –26 °C, and +4 °C temperatures during on–orbit ISS operations. Additionally, the MELFI will be utilized to transport the samples to and from the ISS in a low temperature controlled environment. It is fully contained in a standard 6–post ISPR. Each Dewar can be controlled independently according to the three operating modes:

(1) 80 °C mode, where the temperature of contained specimens is not in any case higher than –68 °C,

(2) 26 °C mode, where the specimen temperature remains within the range of –23 °C to –37 °C,

(3) +4 °C mode, where the specimen temperature remains within the range of +0.5 °C to +6 °C.

The MELFI system is based on a Brayton cycle refrigeration machine which supplies cold gaseous nitrogen to the dewere enclosures that are maintained at low temperature. The machine consists of one turbine and one compressor wheel mounted on the same shaft. The work required by the compressor is supplied by the electric motor and by the turbine which recovers energy from the expansion of the working fluid. The heat removal from the cold enclosures is performed by means of passive heat exchangers whcih are supplied with the cold nitrogen from the machine.

The MELFI system design is based on a great level of modulatiry which will allow a high level of operational flexibiltiy. The machinery, with the machine itself and the cycles heat exchangers, is contained in one module that is integrated in the rack as a self–standing unit.

The total cold volume is made of different dewar enclosures. Each one is a separate module that is integrated in the rack as a self–standing unit.

Additional information is available in document SSP 57212.

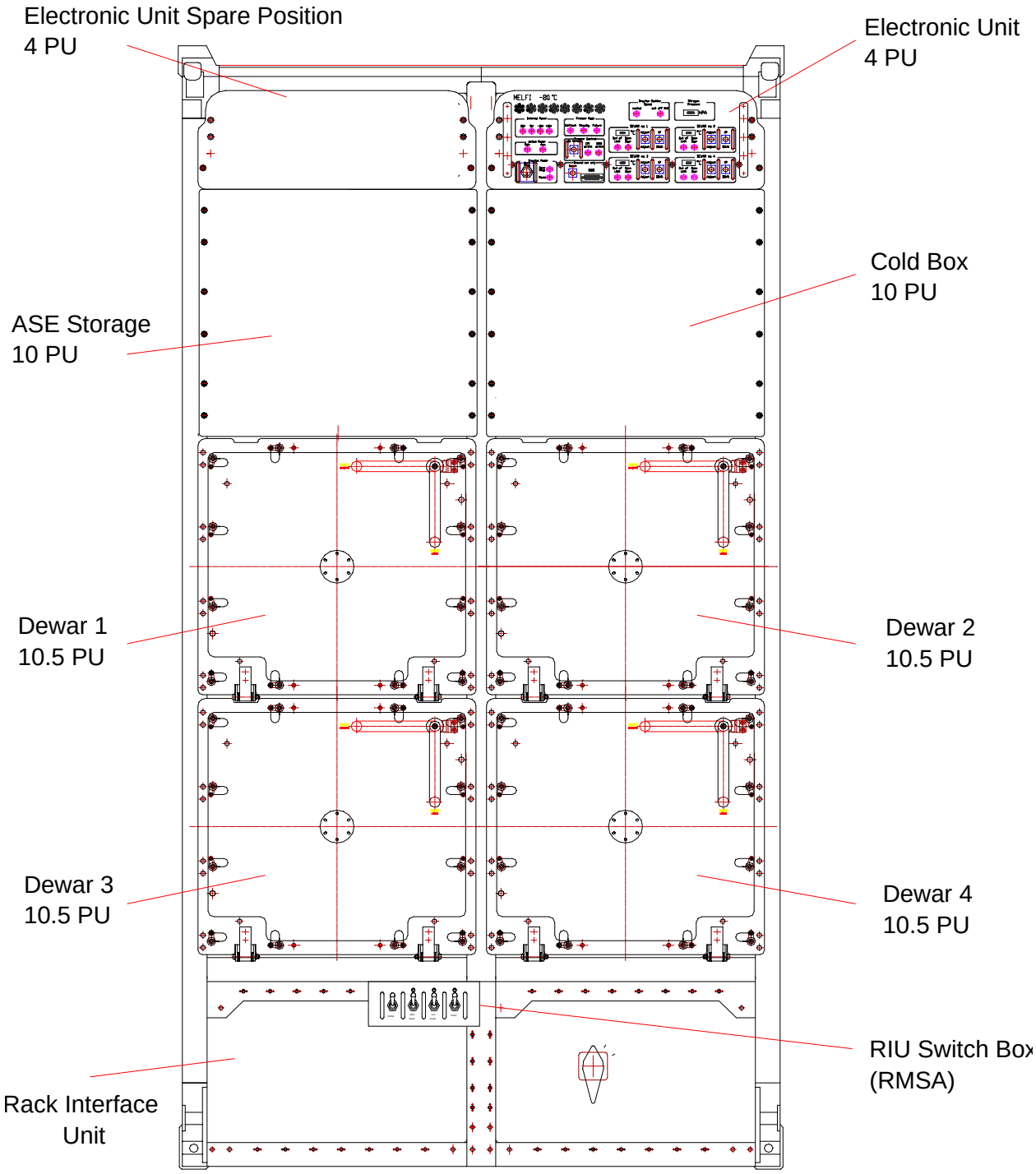

5.17.3 CREW REFRIGERATED FREEZER

The agreement with which the Crew Refrigerated Freezer, Figure 5.17.3–, is being built states: “The total cargo availability for the Refrigerated/Freezer system will be 65 cu ft at a density of 30 lbs/cu ft (1950 lbs total including food and Crew Health Care System (CHeCS). The

Refrigerated/Freezer system will provide drawers for accommodation of food and CHeCS. The refrigerator volume will be maintained at +0.5 °C to +6°C and the temperature in the Freezer volume will not exceed a freezer volume at –23°C under nominal environmental and operational conditions."

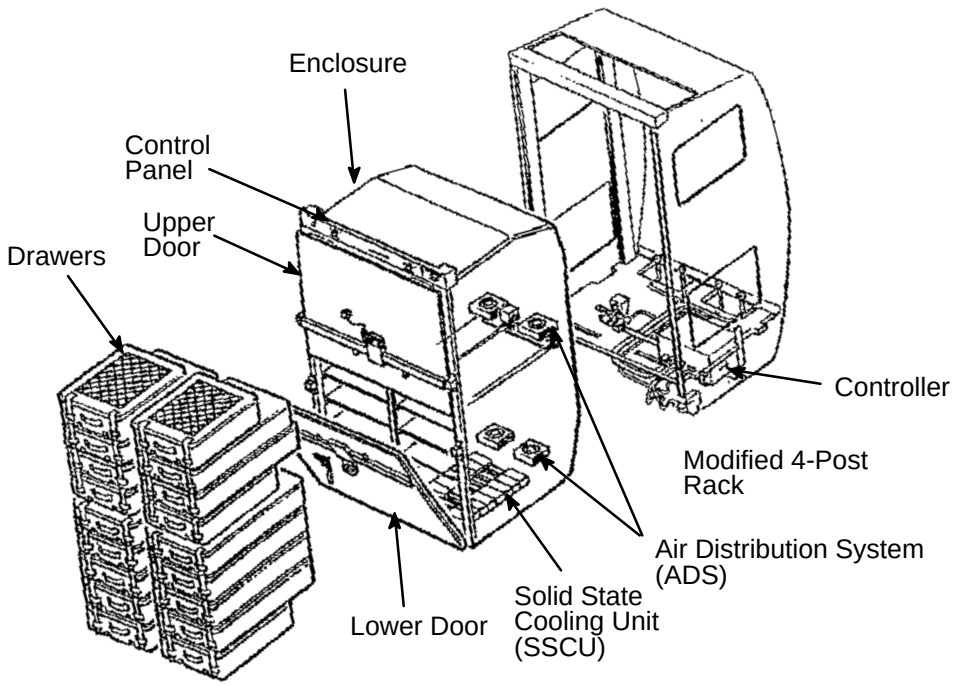

FIGURE 5.17.3–1 CREW REFRIGERATED FREEZER

5.18 RESTRAINTS AND MOBILITY AIDS

Several devices are available to provide restraint and mobility aids to the crew members. Additional information is available in the Intravehicular Activity Restraints and Mobility Aids Standard Interface Control Document SSP 30257:004.

5.18.1 LONG DURATION FOOT RESTRAINT (LDFR)

The Long Duration Foot Restraint, Figure 5.18.1–1, consists of one left and one right brace assembly, one rail assembly, two identical foot plate assemblies, and two foot loop assemblies. LDRFs will be installed at double–wide rack work stations where crew members might stay restrained for long periods of time. Once installed at the worksite, the LDFR can be moved up and down the rack's seat track for height adjustment. Foot plate pitch adjustment of 360 degrees

is provided and the foot plates may be located anywhere along the length of the rail assembly in order to provide the crew member with stance and worksite centering adjustments. The rail assembly and the foot plates can be reversed when additional standoff distance from the rack face is required. The LDFR will not extend beyond the sides of the rack on which it is installed.

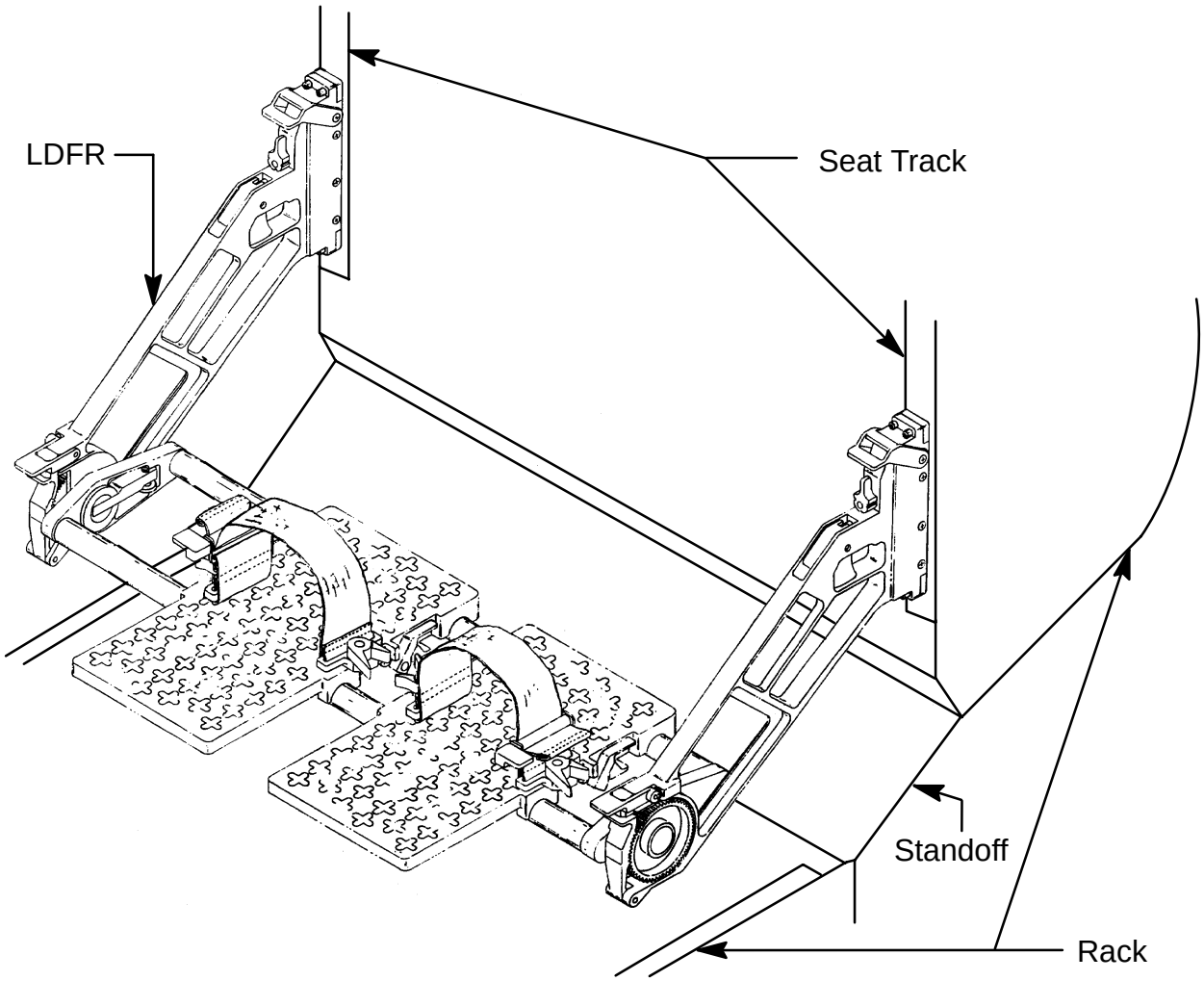

FIGURE 5.18.1–1 LONG DURATION FOOT RESTRAINT ASSEMBLY

5.18.2 SHORT DURATION FOOT RESTRAINT (SDFR)

The Short Duration Foot Restraint, Figure 5.18.2–1, will provide Orbiter style “fly–in” and “fly–out” foot restraint for those worksites that the crew fequently visit but, typically remain at for less than 10 minutes. Each SDFR consists of one foot plate, one foot loop assembly, and a

mechanism for mounting the SDFR to a handrail. SDFRs will accommodate either a left or right foot.

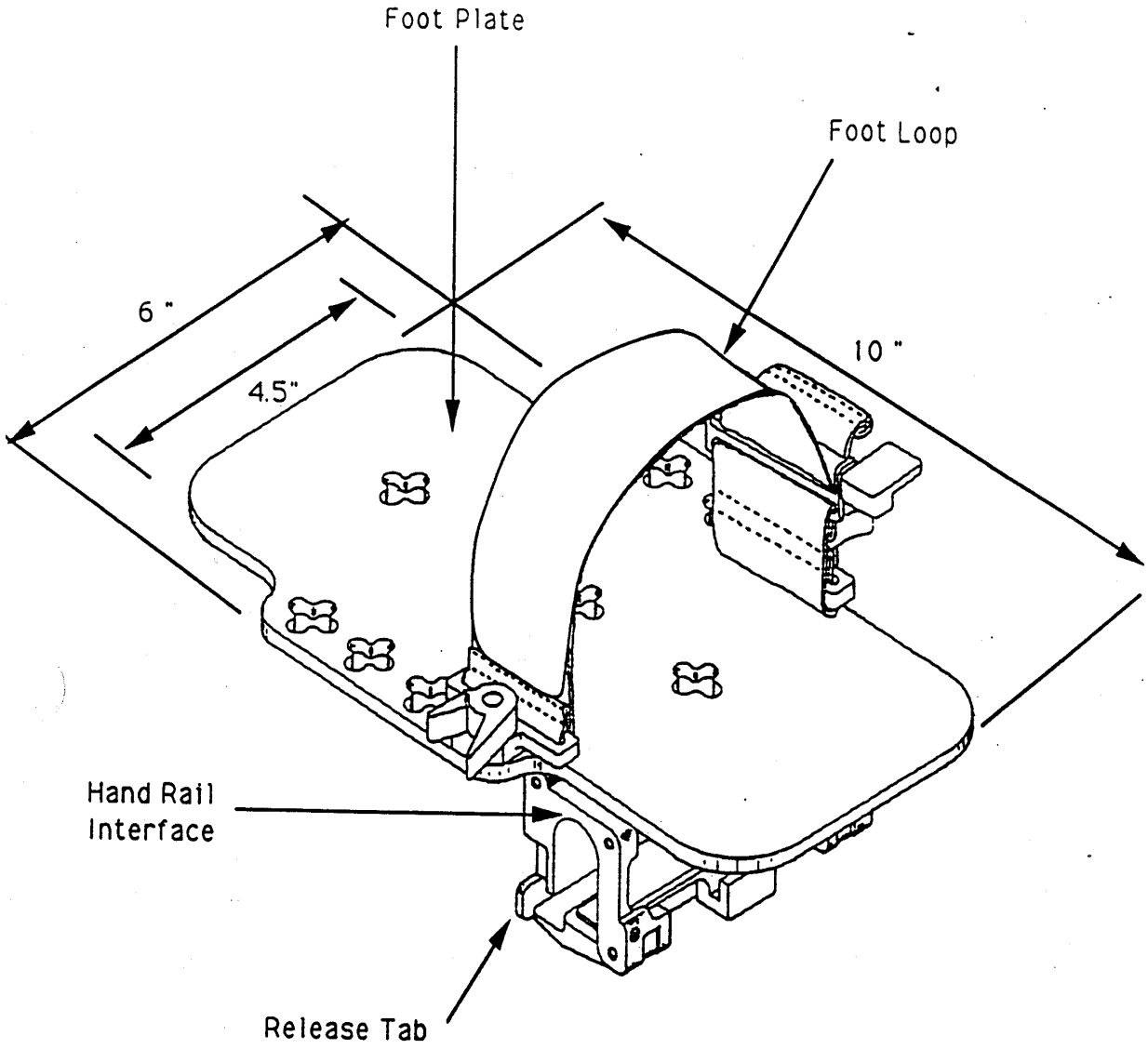

FIGURE 5.18.2–1 SHORT DURATION FOOT RESTRAINT (SDFR)

5.18.3 ANCHOR FOOT RESTRAINT (AFR)

The Anchor Foot Restraint, Figure 5.18.3–1 and 5.18.3–2, consists of a foot plate and a foot loop assembly. The foot plate has a hex stud mounted on the plate's underside which interfaces with the Seat Track Equipment Anchor (STEA) or the Handrail Equipment Anchor (HEA). The AFR, when used with a STEA, can be installed in places where only a small length of seat track is available. The AFR's hex stud interface allows for 30 degree increments of foot plate orientation. This assembly is intended to provide additional foot restraint configurations for non–standard worksites.

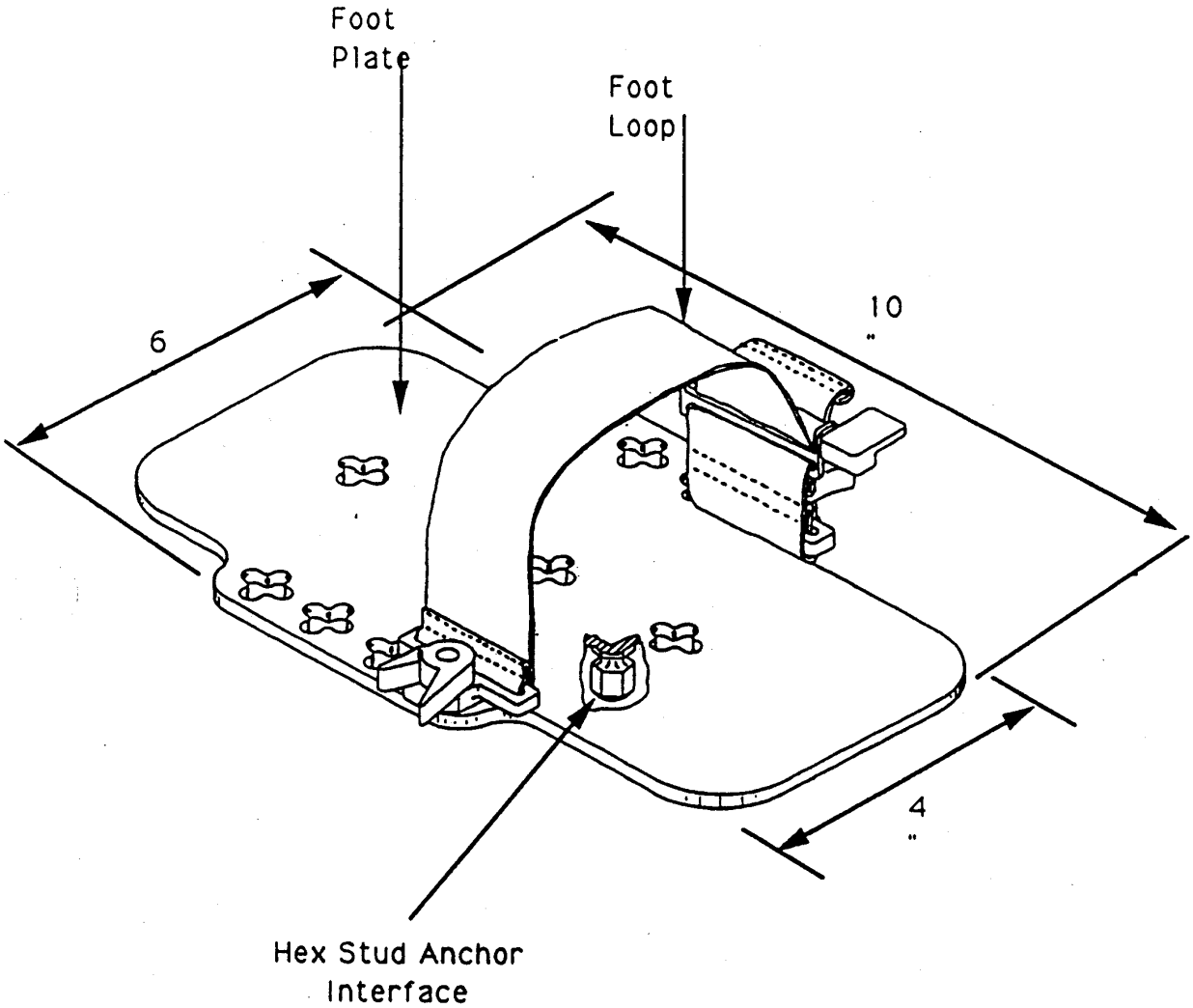

FIGURE 5.18.3–1 ANCHOR FOOT RESTRAINT (AFR)

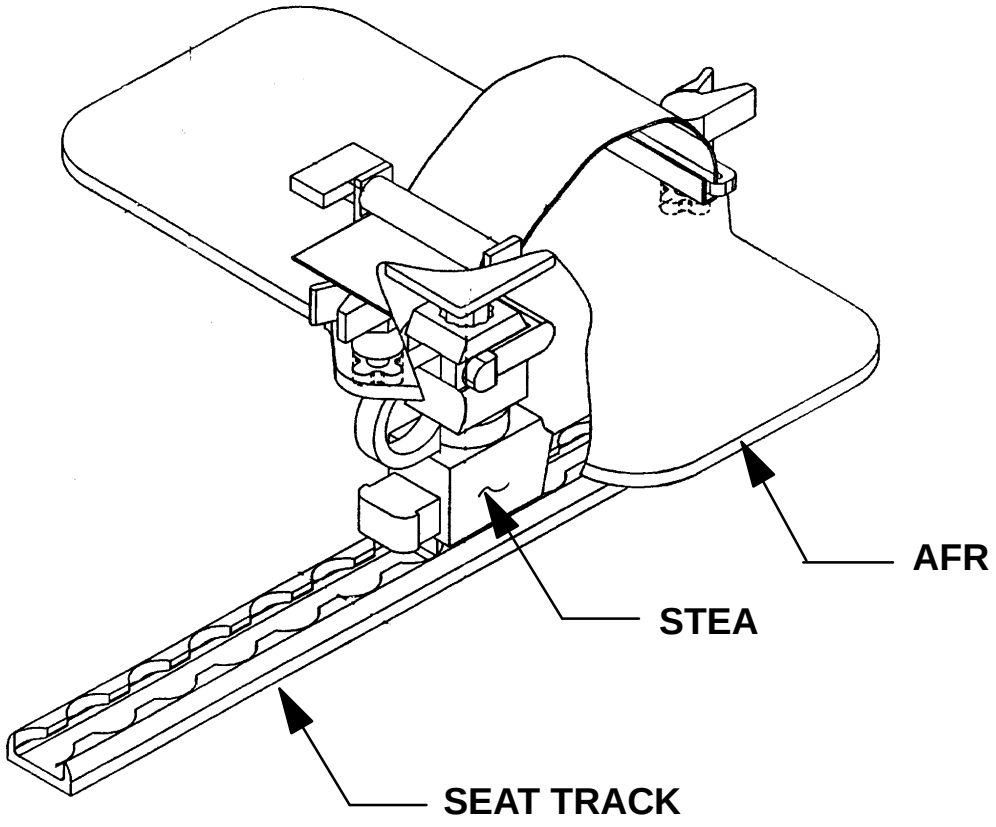

FIGURE 5.18.3–2 ANCHOR FOOT RESTRAINT - INSTALLATION CONCEPT

5.18.4 SEAT TRACK EQUIPMENT ANCHOR (STEA)

The Seat Track Equipment Anchor, Figure 5.18.4–1 and 5.18.4–2, is an integrated mechanical assembly consisting of a tether ring, a hex stud socket and a seat track attachment mechanism. The socket locking feature, the tether ring and the seat track attachment mechanism are accessible and easy to operate when the anchor assembly is attached to seat track and equipment is attached to the anchor's hex stud socket.

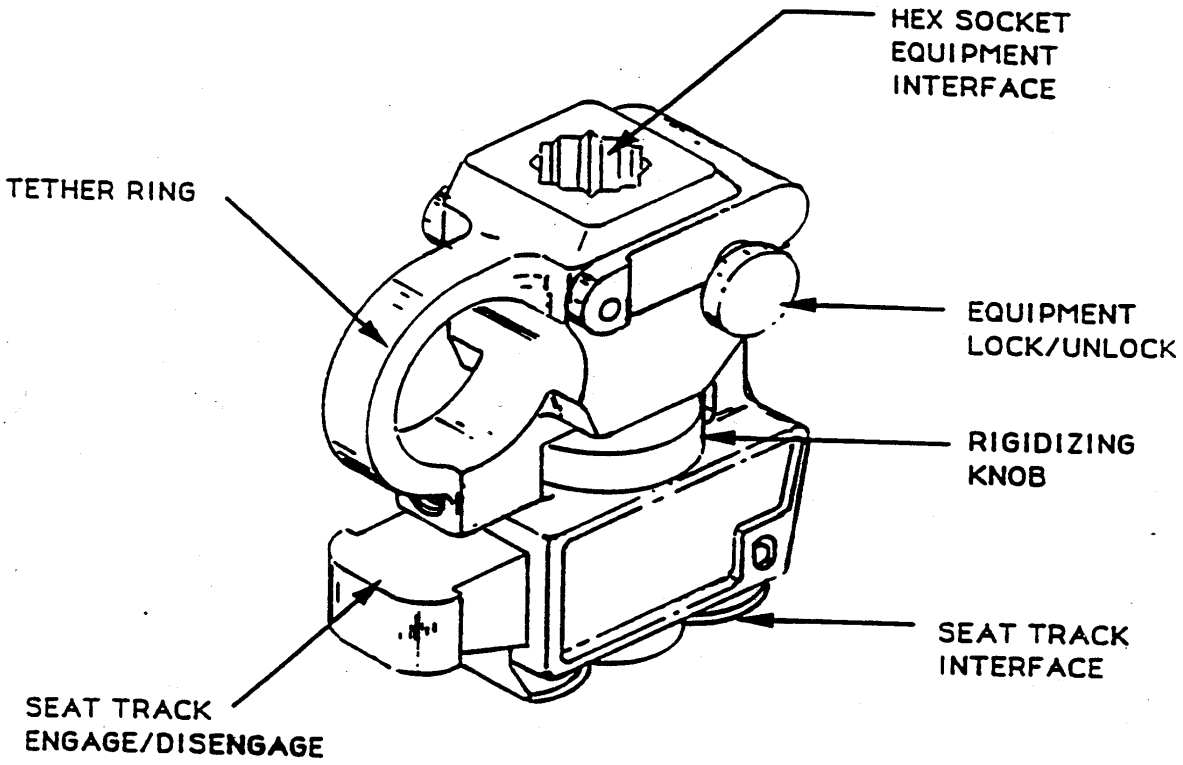

FIGURE 5.18.4–1 SEAT TRACK EQUIPMENT ANCHOR (STEA)

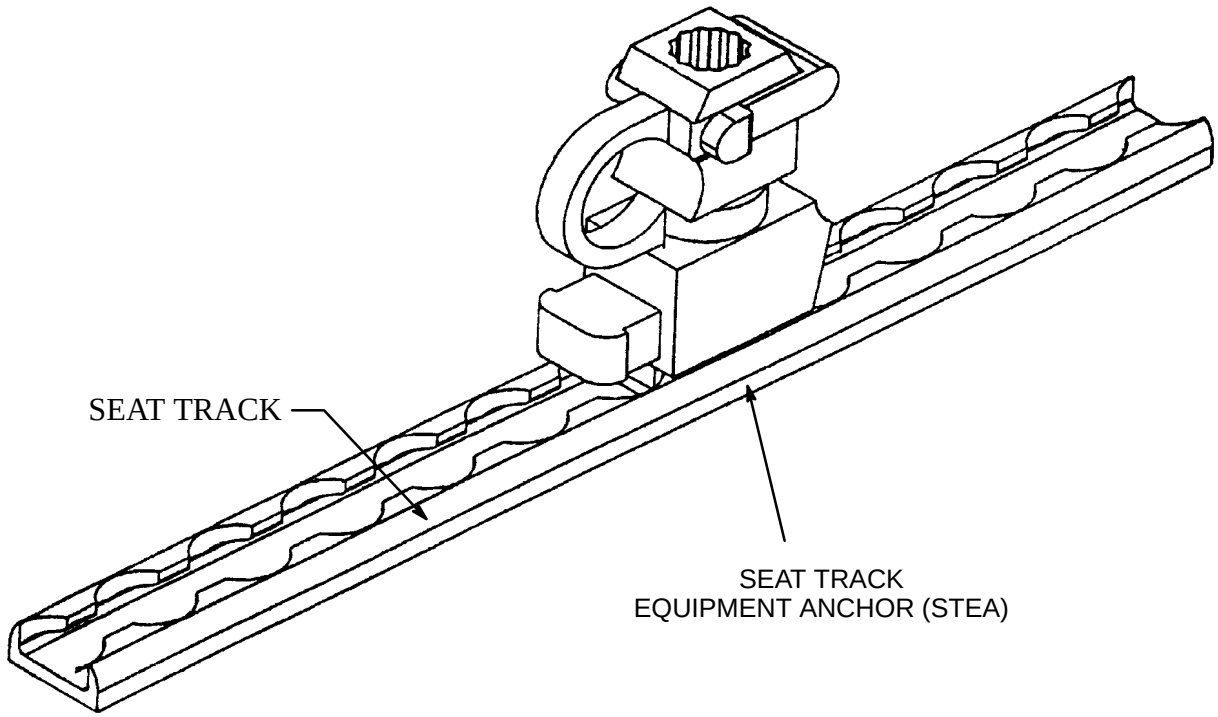

FIGURE 5.18.4–2 SEAT TRACK EQUIPMENT ANCHOR – INSTALLATION CONCEPT

5.18.5 HANDRAIL EQUIPMENT ANCHOR (HEA)

The Handrail Equipment Anchor, Figure 5.18.5–1 and 5.18.5–2, consists of a tether ring, a hex stud socket and a handrail attachment mechanism common to the SDFR's. The socket locking feature, the tether ring and the handrail attachment mechanism are accessible and easy to operate when the anchor assembly is attached to the handrail and equipment is attached to the anchor's hex stud socket.

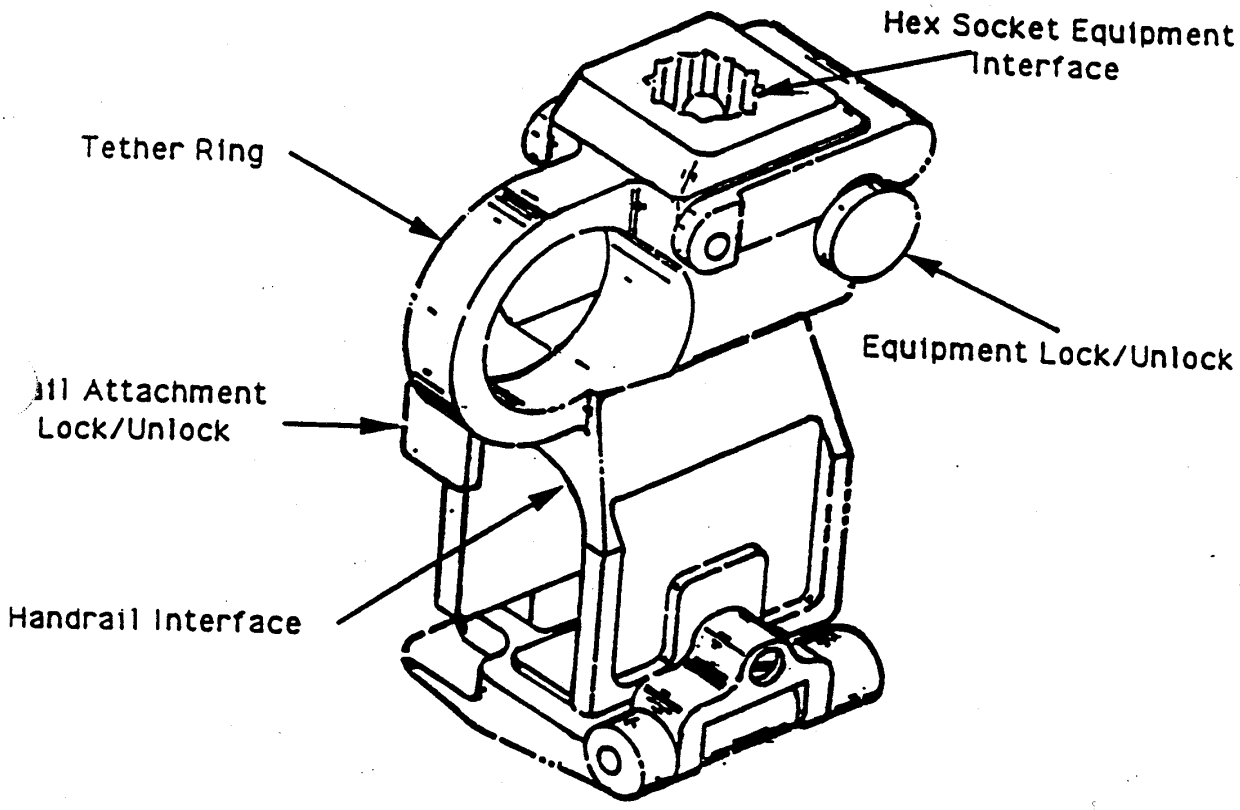

FIGURE 5.18.5–1 HANDRAIL EQUIPMENT ANCHOR (HEA)

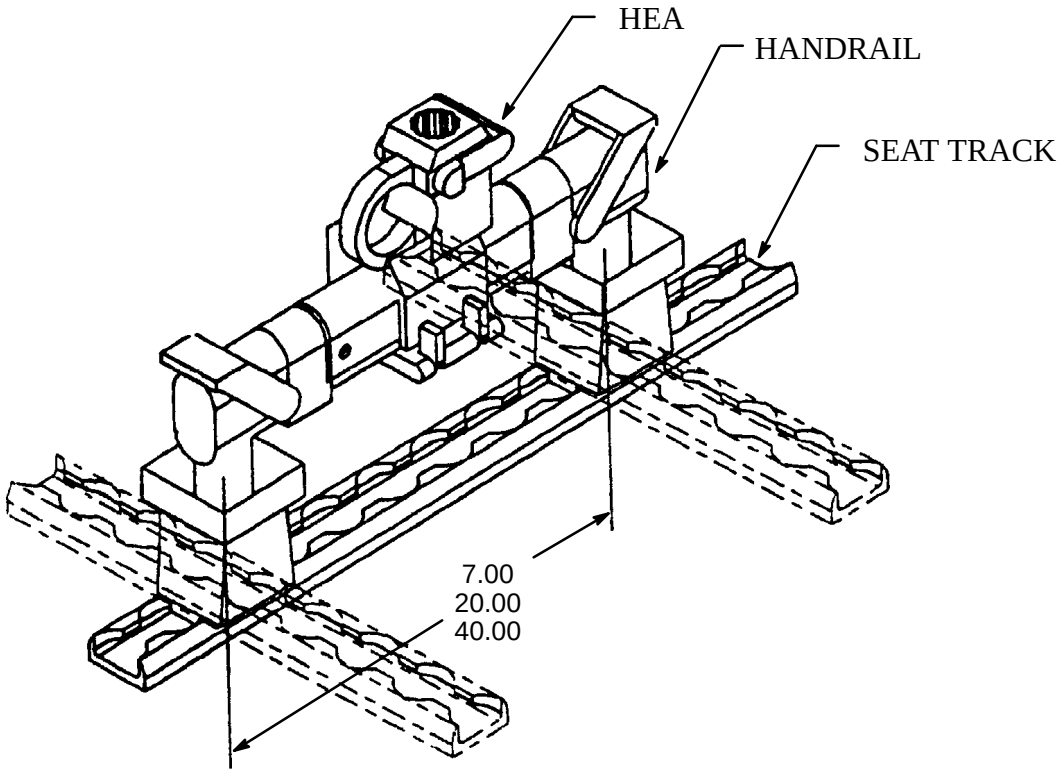

FIGURE 5.18.5–2 HANDRAIL EQUIPMENT ANCHOR – INSTALLATION CONCEPT

5.18.6 ARTICULATING POST ASSEMBLY (APA)

The function of the Articulating Post Assembly, Figure 5.18.6–1 and 5.18.6–2 is to provide a relatively fixed and stable structural anchor at any position or orientation which may be desired. Miscellaneous equipment such as cameras, portable lighting, etc. will be mounted on articulating post assemblies. To provide this function, the post consists of two articulating joints, three post sections, a hex stud at one end which interfaces with the anchors and a hex stud socket at the other end which will attach to the equipment. Two or more articulating posts may be used in series to increase the standoff distance form the anchor attachment or to increase the degree of articulation and/or orientation. The hex stud is attached to a ball/socket joint which will release (slip) in an overload condition to prevent damage to the Articulating post Assembly. At the other end, is a twelve point hex stud socket common to the socket of the STEA, HEA or other Articulating Post Assemblies. Together these interfaces provide 30 degree increments in radial orientation for positioning of attached equipment.

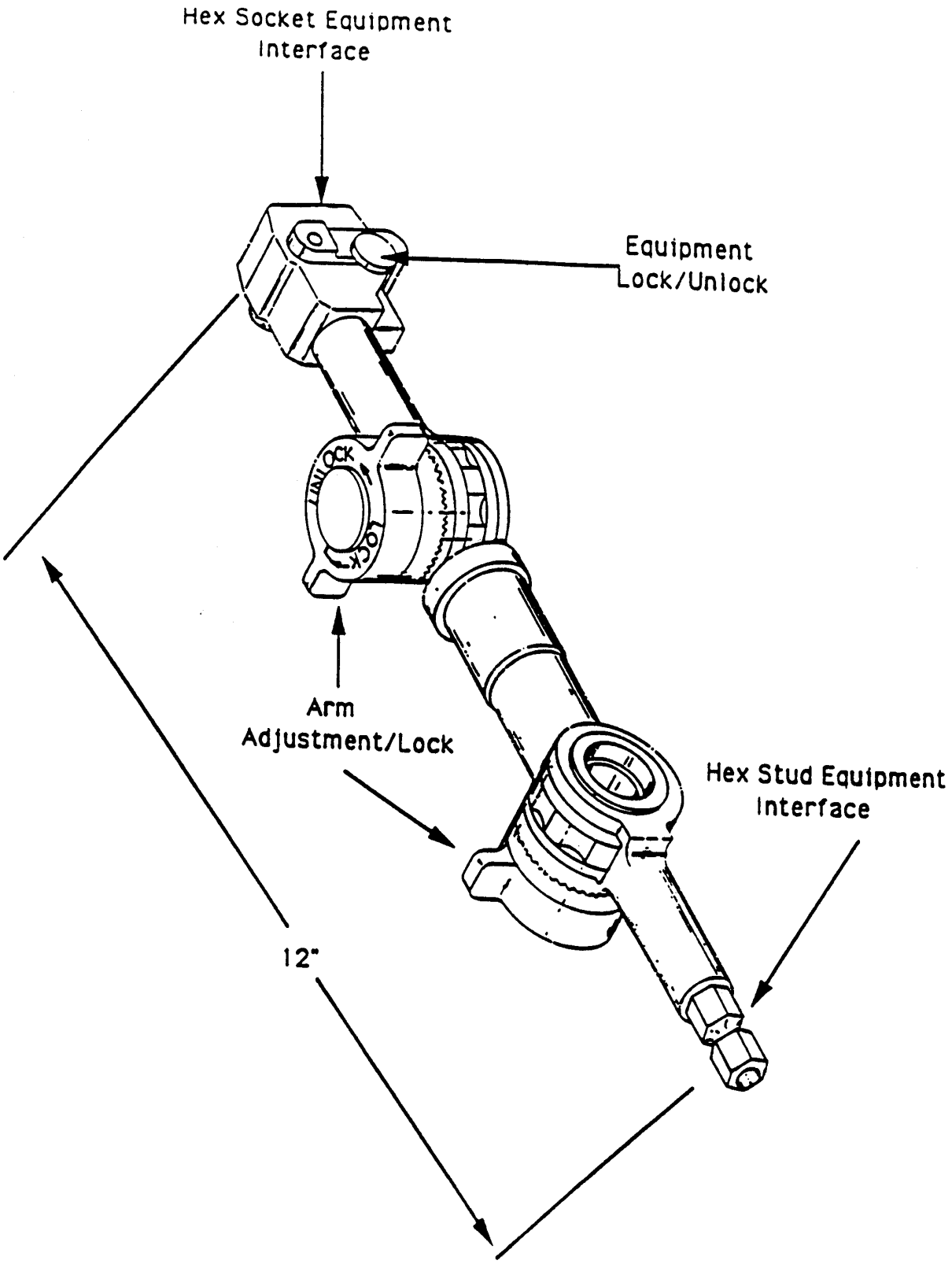

FIGURE 5.18.6–1 ARTICULATING POST ASSEMBLY (APA)

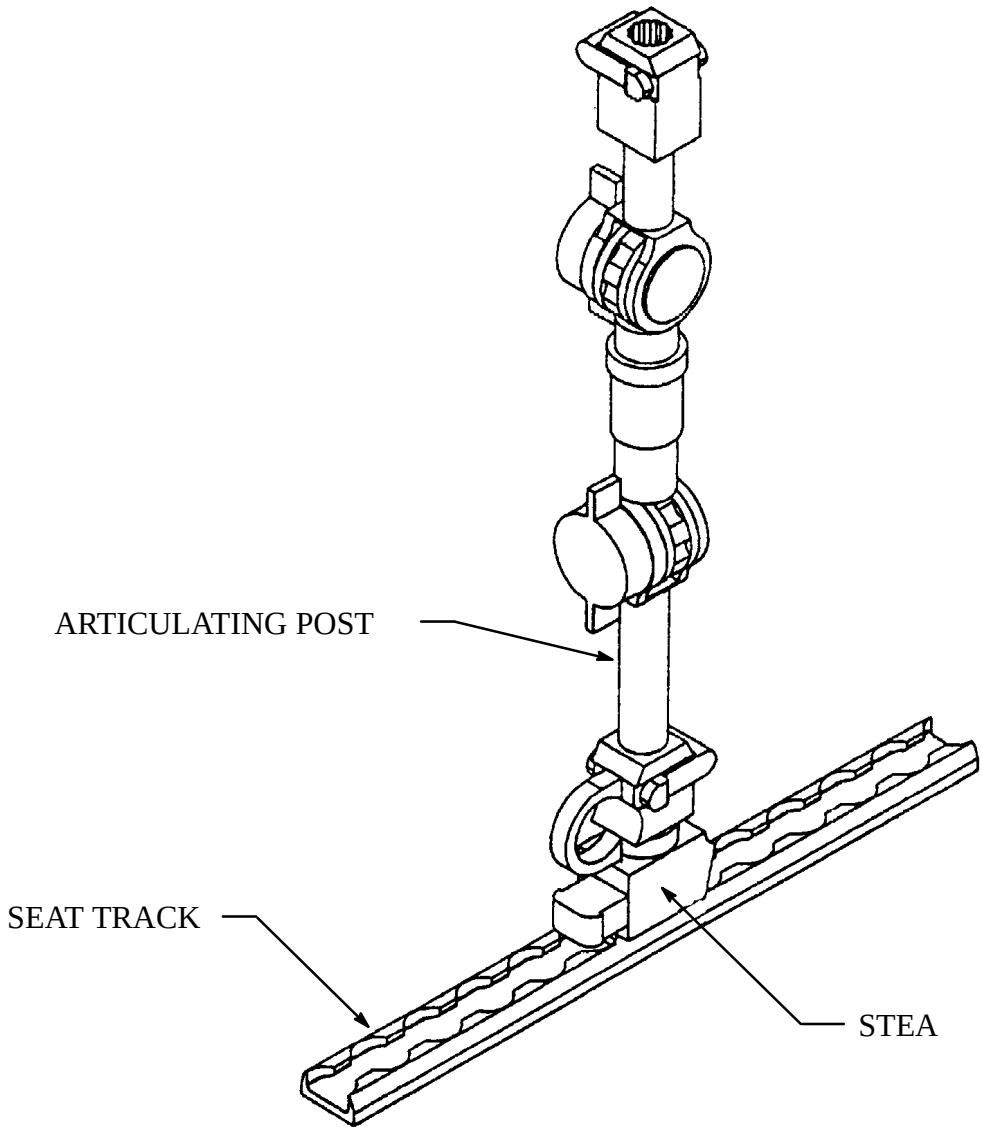

FIGURE 5.18.6–2 ARTICULATING POST ASSEMBLY – INSTALLATION CONCEPT

5.18.7 FIXED LENGTH TETHER (FLT)

The Fixed Length Tether, Figure 5.18.7–1, is approximately 14” long and consists of a short fixed length of Kelvar strap with Carabiner hooks on both ends.

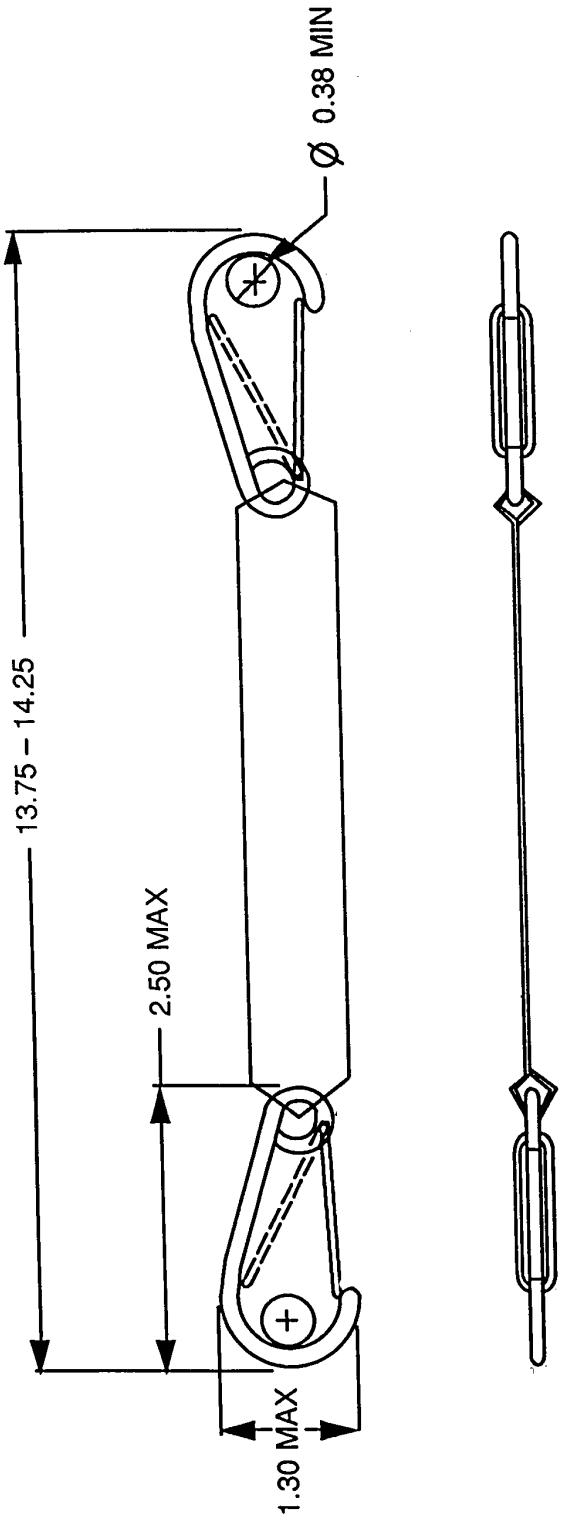

FIGURE 5.18.7–1 FIXED LENGTH TETHER (FLT)

5.18.8 ADJUSTABLE LENGTH TETHER (ALT)

The Adjustable Length Tether, Figure 5.18.8–1, consists of a strap with Carbiner hooks on both ends and a mechanism to manually adjust the length of the strap. The tether hooks are compatible with the tether rings of the anchor assemblies. They are also common with the tether hooks of the torso restraint assembly. Adjusting the strap length requires no more than one hand to pull the strap and one hand to hold the adjustment mechanism (adjustable buckle). Strap length is adjustable to a maximum of 68.0” and the length adjustment mechanism provides a means to manually loosen/tighten the strap and release strap tension. Once the strap is shortened or lengthened, it remains at the desired length whether or not it is in tension. The overall length may be increased by using two or more tether assemblies hooked together in series. Accommodations to stow excess tether strap are provided.

5.18.9 EQUIPMENT BAG ASSEMBLY (EBA)

The Equipment Bag Assembly, Figure 5.18.9–1, has a central large see–thru interior compartment (which contains a smaller see–thru pocket and several expandable loops) and five exterior stowage pockets (one large and 4 small). The bag provides a means for crewmembers to transfer or temporarily stow miscellaneous equipment. The bag is designed so that it can be collapsed to a thickness of approximately two inches for transport or storage. Numerous Velcro pads which can be used to attach tools or other straps are located on both the inside and outside of the bag. Straps on the exterior of the bag may be used as shoulder or waist straps or may be used to secure the bag at the worksite.

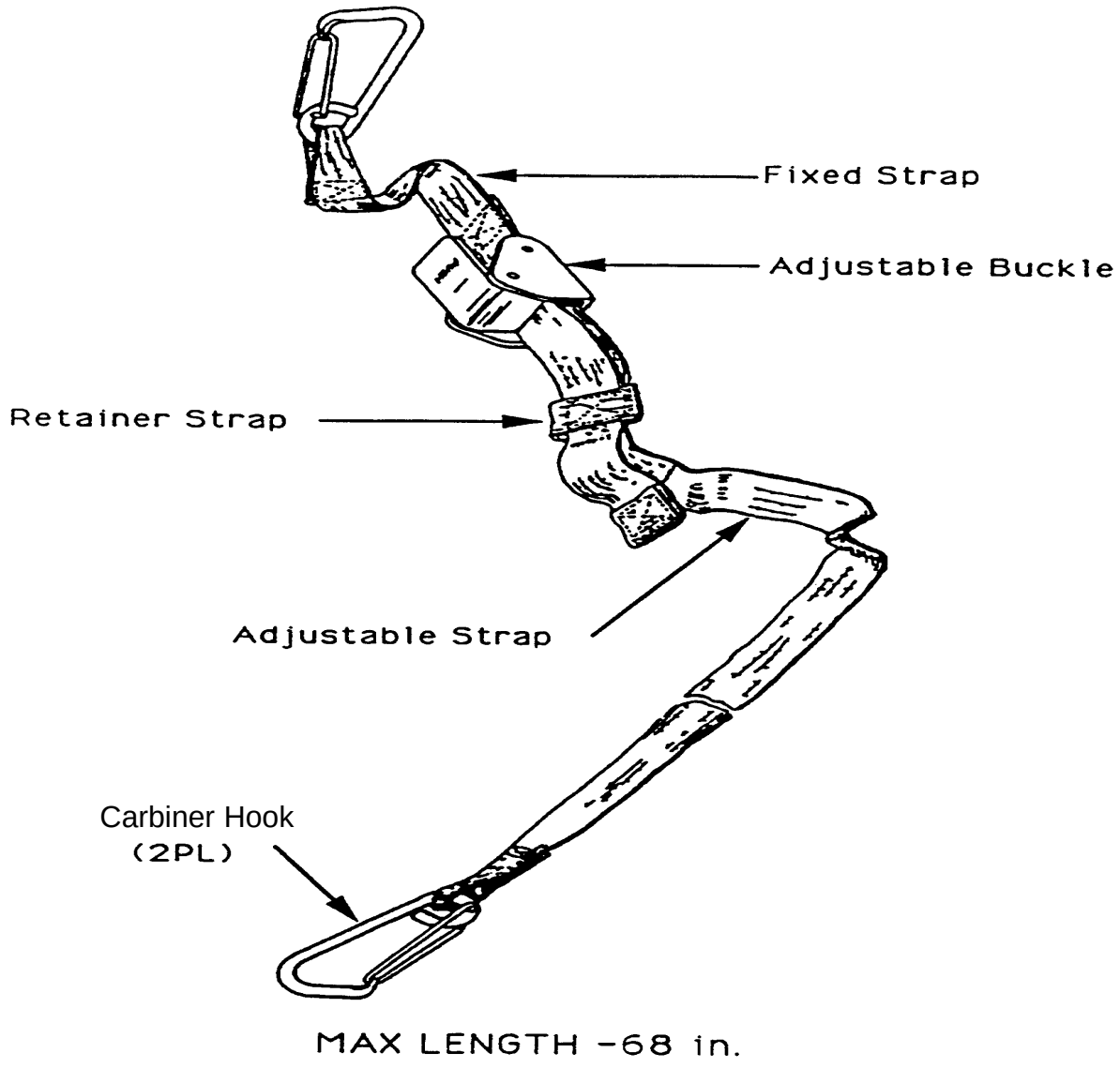

FIGURE 5.18.8–1 ADJUSTABLE LENGTH TETHER

[TBS]

FIGURE 5.18.9–1 EQUIPMENT BAG ASSEMBLY (EBA)

5.18.10 TORSO RESTRAINT ASSEMBLY (TRA)

The Torso Restraint Assembly, Figure 5.18.10–1, consists of one adjustable belt assembly, two extension rod assemblies (with hex studs which interface with seat track or handrail equipment anchors), two crotch straps, and two retractable tether assemblies. Torso restraints can be used in conjunction with any of the Grumman supplied foot restraints to firmly restrain and maintain the position of cremembers for long periods of time without causing excessive body displacement or fatigue.

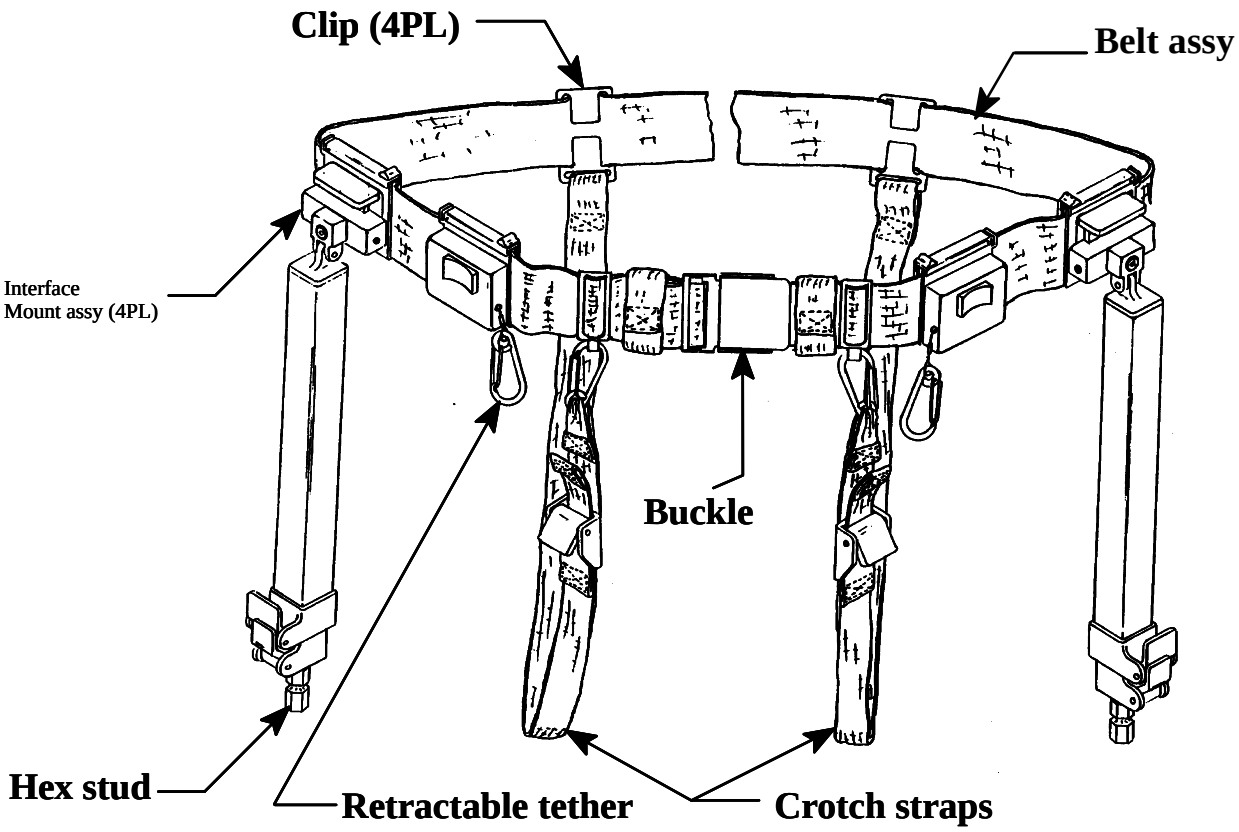

FIGURE 5.18.10–1 TORSO RESTRAINT ASSEMBLY (TRA)

5.18.11 HANDRAILS

Three lengths of Handrails, Figure 5.18.11–1, are provided, a long handrail (41.5”), a medium handrail (21.5”) and a short handrail (8.5”). All three handrail sizes a utilize the same type of mechanism to attach and “rigidize” them to the seat track. They require only one–handed (left or right) operation to attach, latch, rigidize, de–rigidize, unlatch and detach. The handrails have a “soft latch” feature that prevents them from coming off the seat track should the crew member let go before the handrail has been latched. The handrails can be attached and detached from the seat track without disassembly and either end may be attached or detached first.

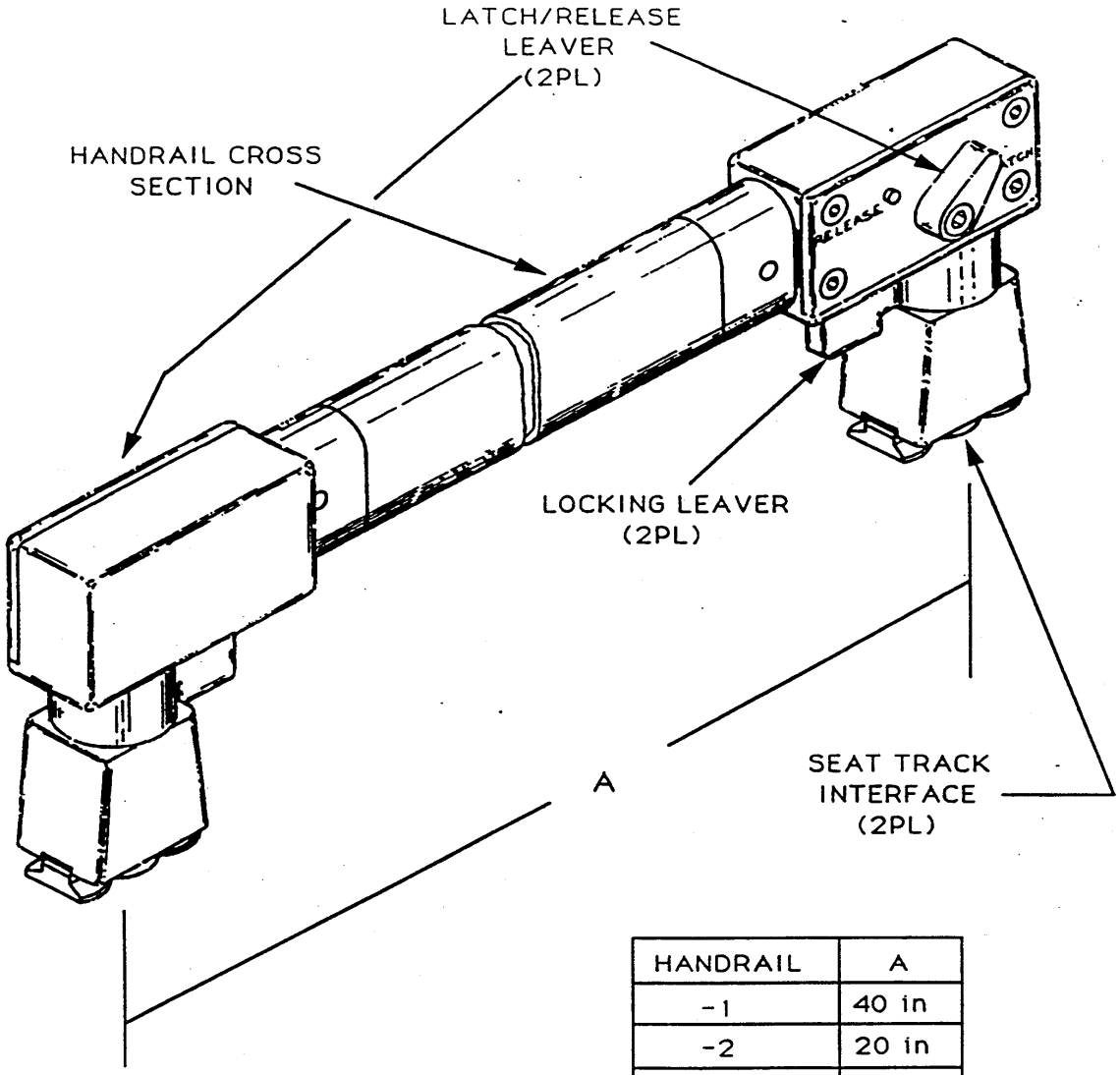

HANDRAIL	A
-1	40 in
-2	20 in
-3	7 in

FIGURE 5.18.11–1 HANDRAILS

5.19 UTILITY OUTLET PANEL (UOP)

The UOP, Figure 5.19–1, provides 120 Vdc power with ground fault isolation at a minimum continuous current of 11.9 A via two user interface ports and provides a data interface for 1553 STUB LB–A. The voltage envelope of the UOP is 113 to 126 Vdc (interface). The total current provided by the UOP is the sum of the currents provided by each port up to 11.9 A. Each power interface port is capable of supplying the maximum current only when the other port is not in use. The maximum UOP power output is 1428 W. The power output at the UOP is defined as

Interface C. Circuit protection for UOP input current is consistent with 12–A Type I and Type V RPCs. Each UOP contains one Ground Fault Circuit Interrupt (GFCI) to protect both outlets. The GFCI current trip point is 8.5 mA maximum. The trip time is less than or equal to 25 ms. Attempts to reset the circuit while a ground fault is present will not restore power to the load. Once the ground fault is eliminated, the circuit can be reset and power restored. Additional information is available in document SSP 30257:002.

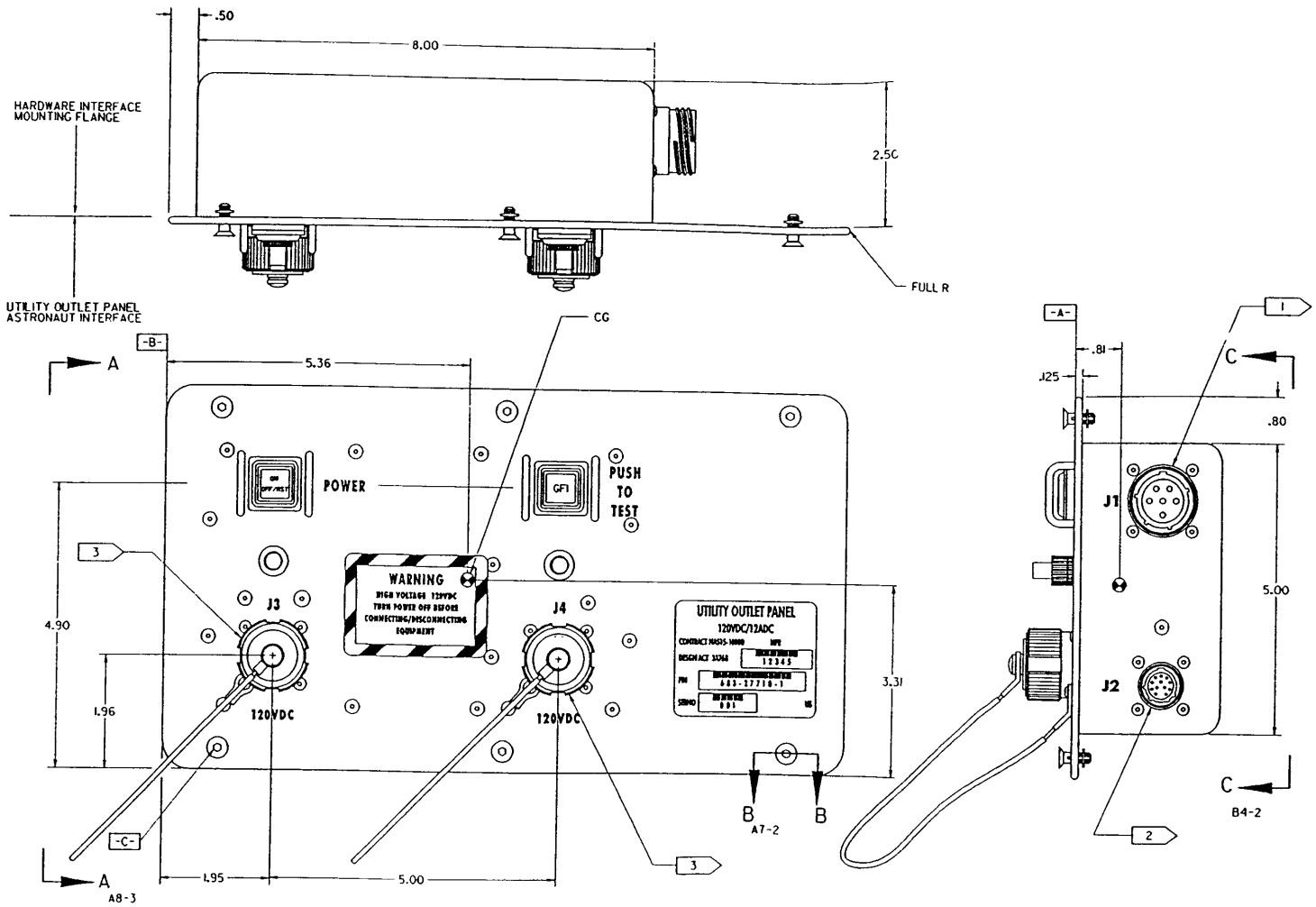

NOTES:

1. INPUT POWER CONNECTOR, J1: P/N NATCOOTI7N6PN PER SSO 21635.
2. STATION 1553 BUS CONNECTOR, J2: P/N NATCOOTIIN35PN PER SSO 21635.
3. OUTPUT POWER CONNECTOR, J3, J4: P/N NATCOOTI5N97SN PER SSO 21635.
4. NUMBERED NOTES PERTAIN ONLY TO THE SHEET ON WHICH THEY APPEAR.

FIGURE 5.19–1 UTILITY OUTLET PANEL (UOP) MECHANICAL DRAWING

(This Page Intentionally Left Blank)

APPENDIX A ABBREVIATIONS AND ACRONYMS

A	Angstrom
AAA	Avionics Air Assembly
AC	Alternating Current
ACS	Atmospheric Control and Supply
ADL	Applicable Documents List
AFR	Anchor Foot Restraint
ALT	Adjustable Length Tether
amps	Amperes
ANSI	American National Standards Institute
APA	Articulating Post Assembly
APID	Application Process Identifier
APM	Attached Pressurized Module
ANSI	American national Standards Institute
APA	Articulating Post Assembly
APID	Application Process Identifer
APS	Automated Payload Switch
Ar	Argon
ARCU	American to Russian converter Unit
ARIS	Active Rack Isolation System
ARPC	Auxiliary Remote Power Controller
ASC	Aisle Stowage Container
ASCII	American Standard Code for Information Interchange
ATCS	Active Thermal Control System
ATU	Audio Terminal Unit
AUI	Auxiliary User Interface
AWG	American Wire Gage
BC	Bus Controller
BCD	Binary Coded Decimal
BHC	Bayonet Network Connector
BIA	Bus Interface Adapter

BNC	Bayonet Network Connector
BPDU	Bitstream Protocol Data Unit
BPSK	Baseband Phase Shift Keying
BSP	Baseband Signal Processor
BST	Bit Summary Table
°C	Degree Centigrade
CC	Cubic Centimeter
C&C	Command and Control
C&DH	Command & Data Handling
C&T	Communications and Tracking
C&W	Caution and Warning
CAM	Centrifuge Accommodations Module
CCH	Crew Communications Handset
CCS	C&C MDM Control Software
CCAA	Common Cabin Air Assembly
CCSDS	Consultative Committee for Space Data Systems
CCT	Cold Cathode Transducer
CDRA	Carbon Dioxide Removal Assembly
cg	Center of Gravity
CGSE	Common Gas Supply Equipment
CHeCS	Crew Heath Care System
CHX	Cabin Heat Exchanger
cm	Centimeter
CO_2	Carbon Dioxide
COR	Communication Outage Recorder
COTS	Commercial–off–the–Shelf
CPS	Cabin Pressure Sensor
CSCI	Computer Software Configuration Item
CSOC	Canadian Space Operations Center
CSMA/CD	Carrier Sense Multiple Access with Collision Detection
CTB	Central Thermal Bus
CU in	Cubic Inches

CVIU	Common Video Interface Unit
CVT	Current Value Table
CWC	Contingency Water Collection
dB	Decibel
dc	Direct Current
DDCU	Direct Current–to–Direct Current Converter Unit
DRAM	Dynamic Random Access Memory
EBA	Equipment Bay Assembly
ECLS	Environmental Control and Life Support
ECLSS	Environmental Control and Life Support System
EEPROM	Electrically Eraseable Programmable Read Only Memory
EHS	Enchased HOSC System
EMA	Extravehicular Mobility Unit
EMC CS-01, 02	Electromagnetic Compatibility; Conducted Susceptibility -01 (CS-01), Conducted Susceptibility -02 (CS-02)
EMI	Electromagnetic Interference
EMU	Extravehicular Mobility Unit
EPCE	Electrical Power Consuming Equipment
EPS	Electrical Power System
ESA	European Space Agency
ESD	Electrostatic Discharge
ESOC	European Space Operations Center
EVA	Extra Vehicular Activity
EXPRESS	Expedite the Processing of Experiments to Space Station
F	Force
°F	Degrees Fahrenheit
FC	Firmware Controller
FCR	Flight Control Room
FCS	Frame Check Sequence
FCSD	Flight Crew Support Division

FGB	Functional Cargo Block (Functionalui Germaticheskii Block)
FLT	Fixed Length Tether
FMT	File and Memory Transfer
ft	feet
GFCI	Ground Fault Circuit Interrupter
GMT	Greenwich Mean Time
GN_2	Gaseous Nitrogen
GNC	Guidance, Naviagation and Control
GPC	General Purpose Computer
GPS	Global Positioning Satellite
GSE	Ground Support Equipment
HC	Heater Control
He	Helium
HEA	Handrail Equipment Anchor
Hg	Mercury
HOSC	Huntsville Operations Support Center
hr	Hour
HRDL	High Rate Data Link
HRFM	High Rate Frame Multiplexer
HRM	High Rate Modem
H/X	Heat Exchanger
Hz	Hertz
IAS	Internal Audio Subsystem
IATCS	Internal Active Thermal Control System
ICD	Interface Control Document
ID	Identification
IDD	Interface Design Document
IDRD	Integrated Definition Requirements Document
IEC	International Electro Technical Commission
IEEE	Institute of Electrical and Electronic Engineers

IMS	Inventory Management System
IMV	Inter–Module Ventilation
In	Inch
IP	International Partner
IRB	Institutional Review Board
IRD	Interface Requirements Document
ISO	International Standards Organization
ISPR	International Standard Payload Rack
ISS	International Space Station
ITCS	Internal Thermal Control System
IVA	Intra–Vehicular Activity
IVS	Internal Video Subsystem
JEM	Japanese Experiment Module
JPM	Japanese Pressurized Module
JSC	Johnson Space Center
kbps	kilobytes per second
kbyte	kilobyte
kg	kilograms
kH_z	kilohertz
kPa	kilopascal
KSC	Kennedy Space Center
kW	kiloWatt
LAN	Local Area Network
lbf	pound force
lbm	pounds mass
LCA	Load Control Assembly
LCT	Limit Check Table
LCV	Levco Crystal Violet
LDFR	Long Duration Foot Restraint
LDP	Logical Data Path

LED	Light Emitting Diode
LET	Linear Energy Transfer
LRC	Local Reference Clock
LRDL	Low Rate Data Link
LSE	Lab Support Equipment
LSM	Legal Station Modes
LTL	Low Temperature Loop
LVLH	Local Vertical, Local Horizontal
µs	micro–second
µg	micro–gravity
mA	milliAmperes
MAPTIS	Materials and Processes Technical Information System
max	maximum
mbar	millibar
MBF	Mission Build Facility
Mbps	Mega bits per second
MBSU	Main Bus Switching Unit
MCA	Major Constituent Analyzer
MCC–H	Mission Control Center–Houston
MCC–M	Mission Control Center–Moscow
MCAH	MPLM Cargo Accommodations Handbook
MDB	Mission Data Base
MDL	Middeck Locker
MDM	Multiplexer-Demultiplexer
MDP	Maximum Design Pressure
MELFI	Minus Eighty–Degree Laboratory Freezer
mg/L	milligram/Liter
MIL-STD	Military Standard
min	minimum
MLE	Middeck Locker Equivalent
MLI	Multi–Layered Insulation
mm	millimeter

mohm	milliohm
MOSFET	Metallic Oxide Substrate Field Effect Transistor
MPa	Mega Pascal
MPEV	Manual Pressure Equalization Values
MPLM	Mini–Pressurized Logistics Module
MRB	Microgravity Rack Barrier
MRDL	Medium Rate Data Link (Ethernet)
ms	millisecond
MS	Mass Spectrometer
MSD	Mass Storage Device
MSFC	Marshall Space Flight Center
MSS	Mission Support Services
MTL	Moderate Temperature Loop
N	Newton
N_2	Nitrogen
NA	Not Applicable
NASA	National Aeronautics and Space Administration
NASDA	National Space Development Agency of Japan
NASTRAN	NASA Structural Analysis
NCS	Node 1 MDM Control Software
NIRA	Non–Isolated Rack Vibration Assessment
NIV	Nitrogen Isolation Valve
NRZ–L	Non–Return–to–Zero–Level
NSOC	Japanese Space Operations Center
NSTS	National Space Transportation System
NTSC	National Television Systems Committee
NTU	Nephelometric Turbidity Unit
Ω	ohm
O_2	Oxygen
O&U	Operations and Utilization
OGA	Oxygen Generator Assembly

OIU	Orbiter Interface Unit
OIV	Oxygen Isolation Valve
ORCA	Oxygen Recharge Compression Assembly
ORU	Orbital Replacement Unit
P_a	Pascal
PAH	Payload Accommodations Handbook
PAS	Payload Application Software
PCA	Pressure Control Assembly
PCP	Pressure Control Panel
PCS	Portable Computer System
PCSCDS	Portable Computer System Command and Data Software
PCU	Platinum Cobalt Unit
PD	Payload Developer
PDA	Payload Disconnect Assembly
PDB	Power Distribution Box
PEHG	Payload Ethernet Hub/Gateway
PEP	Payload Executive Processor
PFE	Portable Fire Extinguisher
PFM	Pulse Frequency Modulation
PGT	Pirani Gauge Transducer
PI	Payload Integrator
PIA	Payload Interface Agreement
PIO	Payload Integration Office
PIRN	Preliminary/Proposed Interface Revision Notice
PL	Payload
PNTD	Plastic Nuclear Track Detectors
POCC	Payload Operations Control Center
POIC	Payload Operations Integration Center
PPC	Pressure Control Valve
PPM	Parts Per Million
PPRA	Positive Pressure Relief Assemblies
PPR	Positive Pressure Relief

PPRV	Positive Pressure Relief Valve
PPT	Positive Pressure Transducer
PRCU	Payload Rack Checkout Unit
psia	Pounds per square inch absolute
psid	Pounds per square inch differential
PSP	Payload Signal Process
PSRP	Payload Safety Review Panel
PU	Panel Unit
PUI	Program Unique Indemnifiers
PV	Photovoltaic
RAD	Radiation–absorbed Dose
RF	Radio Frequency
RFCA	Rack Flow Control Assembly
RH	Relative Humidity
RIC	Rack Interface Controller
RID	Rack Insertion Device
RIV	Rack Isolation Valve
RMS	Root Mean Square
RMSA	Rack Maintenance Switch Assembly
RPC	Remote Power Controller
RPCM	Remote Power Control Modules
RPDA	Remote Power Distribution Assemblies
RS	Russian Segment
RSA	Russian Space Agency
RSC	Rack Shipping Container
RSP	Re–Supply Stowage Platform
RSS	Root Sum Square
RT	Remote Terminal
RWS	Remote Work Station
s	second
S&MA	Safety and Mission Assurance

SAA	South Atlantic Anomaly
SCC	Stress Corrosion Cracking
SCFM	Standard Cubic Feet Per Minute
SCU	Synchronization and Control Unit
SD	Smoke Detector
SDFR	Short Duration Foot Restraint
SEB	Single Event Burnout
SEE	Single Event Effects
SEGR	Single Event Gate Rupture
SEU	Single Event Upsets
SFCA	System Flow Control Assembly
SGANT	Space–to–Ground Antenna
SGS	Space–to–Ground Subsystem
SIR	Standard Interface Rack
SLPM	standard Liters Per Minute
SMAC	Spacecraft Maximum Allowable Concentrations
SMCC	Service Module Control Computer
SPDA	Secondary Power Distribution Assembly
SPL	Sound Pressure Level
SPOE	Standard Payload Outfitting Equipment
SRB	Solid Rocket Booster
SSC	Space System Computer
SSCS	Space–to–Space Communications System
SSME	Space Shuttle Main Engine
SSOR	Space–to–Space Orbiter Radio
SSP	Space Station/Shuttle Program
SSQ	Space Station Qualified
SSSR	Space–to–Space Station Radio
STEA	Seat Track Equipment Anchor
STP	Stnadard Temperature and Pressure
STS	Space Transportation System
TAEM	Terminal Area Energy Management

TBC	To Be Confirmed
TBD	To Be Determined
TBS	To Be Supplied
TCS	Thermal Control System
TCCS	Trace Containment Control System
TDRSS	Tracking and Data Relay Satellite System
THC	Temperature/Humidity Control
TLD	Thin Layer Dosimetry
TOC	Total Organic Carbon
TON	Threshold Odor Number
TRA	Torso Restraint Assembly
TTN	Taste Threshold Number
UHF	Ultra High Frequency
UIRD	User Interfaces Requirements Document
UIL	User Interface Language
UIP	Utility Interface Panel
UOP	Utility Outlet Panel
U.S.	United States
USGS	United States Ground Segment
USL	United States Laboratory
USOS	United States Orbital Segment
UTC	Universal Time Code
V	Volt
VBSP	Video Base–band Signal Processor
VCDU	Virtual Channel Data Units
VCID	Virtual Channel Identifier
VCU	Video Compression Unit
VDS	Video Distribution System
VES	Vacuum Exhaust System
VMDB	Vehicle Master Data Base
VRCV	Vent/Relief Control Valve

VRIV	Vent/Relief Isolation Valve
VRV	Vent/Relief Valve
VRS	Vacuum Resource System
VSU	Video Switch Units
VTR	Video Tape Recorder
VV	Vacuum Vent
WG	Waste Gas
WPP	Water Pump Package
Xe	Xenon
XOR	Exclusive OR
XPOP	X axis Perpendicular to Orbital Plane
ZOE	Zone of Exclusion